www.mundial-casartelli.it

chiavi combinate a cricchetto snodate - reversibili - semplici

combination wrench
flex - reversible - simple

Zorzo Tecnologie Srl

GOMMOGRIP

giravite professionale impugnatura bicomponente ergonomica

lama in acciaio chrom-molibdenum HRC60

professional screwdriver
ergonomic bicomponent handle
chrom-molybdenum steel HRC60 blade

foro per appendere
hanging hole

profilo triangolare
per trasmissione sforzo
triangle section for force transmission

sezione cilindrica
per rotazione rapida
cylindric section for fast rotation

codice a barre e simbolo
bar code and symbol

acciaio - *steel*
chrom-molybdenum
durezza - *hardness* HRC60

Zorzo Tecnologie Srl

50 GIRAVITE PER VITI INTAGLIO-MECCANICI - acciaio chrom-vanadium-molibdeno finitura cromata punta nera

SCREWDRIVER FOR SLOTTED HEAD SCREWS-MECHANIC - chrom-vanadium-molybdenum steel chrome plated black finish tip

DIN 5265 ISO 2380 HRC 60 Chrom-Vanadium-Molibdeno

GOMMOGRIP MUNDIAL

	X				
0050.307	**3,0 x 0,5 x 75**	87,5 x 25,4	30	**12**	8011578950002
0050.310	**3,0 x 0,5 x 100**	87,5 x 25,4	32	**12**	8011578950033
0050.410	**4,0 x 0,8 x 100**	109 x 31,7	64	**12**	8011578950095
0050.412	**4,0 x 0,8 x 125**	109 x 31,7	64	**12**	8011578950125
0050.510	**5,5 x 1,0 x 100**	109 x 31,7	72	**12**	8011578950156
0050.512	**5,5 x 1,0 x 125**	109 x 31,7	74	**12**	8011578950187
0050.515	**5,5 x 1,0 x 150**	109 x 31,7	78	**12**	8011578950217
0050.610	**6,5 x 1,2 x 100**	117 x 34,0	86	**12**	8011578950248
0050.612	**6,5 x 1,2 x 125**	117 x 34,0	94	**12**	8011578950279
0050.615	**6,5 x 1,2 x 150**	117 x 34,0	98	**6**	8011578950309
0050.815	**8,0 x 1,2 x 150**	127 x 36,9	125	**6**	8011578950330
0050.820	**8,0 x 1,2 x 200**	127 x 36,9	164	**6**	8011578950361
0050.920	**10,0 x 1,6 x 200**	127 x 36,9	200	**6**	8011578950378

51 GIRAVITE PER VITI INTAGLIO-LAME PARALLELE - acciaio chrom-vanadium-molibdeno finitura cromata punta nera

SCREWDRIVER FOR SLOTTED HEAD SCREWS-CABINET - chrom-vanadium-molybdenum steel chrome plated black finish tip

DIN 5265 ISO 2380 HRC 60

	X				
0051.256	**2,5 x 0,4 x 60**	87,5 x 25,4	28	**12**	8011578950392
0051.310	**3,0 x 0,5 x 100**	87,5 x 25,4	32	**12**	8011578950422
0051.412	**4,0 x 0,8 x 125**	109 x 31,7	64	**12**	8011578950453
0051.415	**4,0 x 0,8 x 150**	109 x 31,7	62	**12**	8011578950484
0051.515	**5,0 x 1,0 x 150**	109 x 31,7	72	**12**	8011578950545

52 GIRAVITE PER VITI CROCE PHILLIPS - acciaio chrom-vanadium-molibdeno finitura cromata punta nera

SCREWDRIVER FOR PHILLIPS CROSS HEAD SCREWS - chrom-vanadium-molybdenum steel chrome plated black finish tip

DIN 5262 ISO 8764 HRC 60

	X				
0052.006	**PH 0 x 60 x 3,0**	87,5 x 25,4	30	**12**	8011578950606
0052.010	**PH 0 x 100 x 3,0**	87,5 x 25,4	34	**12**	8011578950637
0052.108	**PH 1 x 80 x 4,5**	109 x 31,7	68	**12**	8011578950668
0052.112	**PH 1 x 125 x 4,5**	109 x 31,7	76	**12**	8011578950699
0052.210	**PH 2 x 100 x 6,0**	117 x 34,0	92	**12**	8011578950729
0052.215	**PH 2 x 150 x 6,0**	117 x 34,0	98	**6**	8011578950750
0052.315	**PH 3 x 150 x 8,0**	127 x 36,9	146	**6**	8011578950781

53 GIRAVITE PER VITI CROCE POZIDRIV - acciaio chrom-vanadium-molibdeno finitura cromata punta nera

SCREWDRIVER FOR POZIDRIV CROSS HEAD SCREWS - chrom-vanadium-molybdenum steel chrome plated black finish tip

DIN 5262 ISO 8764 HRC 60

	X				
0053.006	**PZ 0 x 60 x 3,0**	87,5 x 25,4	30	**12**	8011578950811
0053.108	**PZ 1 x 80 x 4,5**	109 x 31,7	66	**12**	8011578950842
0053.112	**PZ 1 x 125 x 4,5**	109 x 31,7	72	**12**	8011578950873
0053.210	**PZ 2 x 100 x 6,0**	117 x 34,0	88	**12**	8011578950903
0053.215	**PZ 2 x 150 x 6,0**	117 x 34,0	102	**6**	8011578950934
0053.315	**PZ 3 x 150 x 8,0**	127 x 36,9	148	**6**	8011578950965

Nuova Tecnologie srl

55 GIRAVITE PER VITI INTAGLIO-MECCANICI - acciaio chrom-vanadium-molibdeno finitura cromata punta nera

SCREWDRIVER FOR SLOTTED HEAD SCREWS-MECHANIC - chrom-vanadium-molybdenum steel chrome plated black finish tip

DIN 5265 ISO 2380

0055.403	5,0 x 0,8 x 38	55 x 32	34	12	8011578950996
0055.603	6,5 x 1,0 x 38	55 x 32	36	12	8011578951023

56 GIRAVITE PER VITI CROCE PHILLIPS - acciaio chrom-vanadium-molibdeno finitura cromata punta nera

SCREWDRIVER FOR PHILLIPS CROSS HEAD SCREWS - chrom-vanadium-molybdenum steel chrome plated black finish tip

DIN 5262 ISO 8764

0056.103	PH 1 x 38 x 4,5	55 x 32	34	12	8011578951054
0056.203	PH 2 x 38 x 6,0	55 x 32	36	12	8011578951085

57 GIRAVITE PER VITI CROCE POZIDRIV - acciaio chrom-vanadium-molibdeno finitura cromata punta nera

SCREWDRIVER FOR POZIDRIV CROSS HEAD SCREWS - chrom-vanadium-molybdenum steel chrome plated black finish tip

DIN 5262 ISO 8764

0057.103	PZ 1 x 38 x 4,5	55 x 32	34	12	8011578951115
0057.203	PZ 2 x 38 x 6,0	55 x 32	36	12	8011578951146

58 GIRAVITE PER VITI INTAGLIO-LAME PARALLELE - acciaio chrom-vanadium-molibdeno finitura cromata punta nera

SCREWDRIVER FOR SLOTTED HEAD SCREWS-CABINET - chrom-vanadium-molybdenum steel chrome plated black finish tip

0058.330	3,0 x 0,5 x 300	87,5 x 25,4	42	6	8011578951177
0058.430	4,0 x 0,8 x 300	109 x 31,7	80	6	8011578951207
0058.440	4,0 x 0,8 x 400	109 x 31,7	85	6	8011578963286
0058.530	5,0 x 0,8 x 300	109 x 31,7	96	6	8011578951238
0058.630	6,0 x 1,0 x 300	117 x 34,0	130	6	8011578951269
0058.640	6,0 x 1,0 x 400	117 x 34,0	135	6	8011578963309

59 GIRAVITE PER VITI CROCE PHILLIPS - acciaio chrom-vanadium-molibdeno finitura cromata punta nera

SCREWDRIVER FOR PHILLIPS CROSS HEAD SCREWS - chrom-vanadium-molybdenum steel chrome plated black finish tip

0059.030	PH 0 x 300 x 3,0	87,5 x 25,4	42	6	8011578951290
0059.130	PH 1 x 300 x 4,5	109 x 31,7	98	6	8011578951320
0059.140	PH 1 x 400 x 4,5	109 x 31,7	102	6	8011578963323
0059.230	PH 2 x 300 x 6,0	117 x 34,0	130	6	8011578951351
0059.240	PH 2 x 400 x 6,0	117 x 34,0	134	6	8011578963347

Zeno Tecnologie Srl

90 GIRAVITE ISOLATO 1000 volt VDE - PER VITI INTAGLIO - acciaio chrom-vanadium-molibdeno finitura punta nera
INSULATED SCREWDRIVER 1000 volt VDE - FOR SLOTTED HEAD - chrom-vanadium-molybdenum steel black finish tip

COMMOGRIP MUNDIAL **Impugnatura morbida bicomponente.**
Soft bicomponent handle.

DVE 60900

HRC 60

0090.258	**2,5 x 0,4 x 80**	87,5 x 25,4	28	**6**	8011578952709
0090.310	**3,0 x 0,5 x 100**	87,5 x 25,4	32	**6**	8011578952730
0090.410	**4,0 x 0,8 x 100**	109 x 31,7	60	**6**	8011578952761
0090.512	**5,5 x 1,0 x 125**	109 x 31,7	46	**6**	8011578952792
0090.615	**6,5 x 1,2 x 150**	117 x 34,0	104	**6**	8011578952822
0090.817	**8,0 x 1,6 x 175**	127 x 36,9	156	**6**	8011578952853

Ridotto - Recessed
Ridotto - Recessed

Ridotto
Recessed

92 GIRAVITE ISOLATO 1000 volt VDE - PER VITI CROCE PHILLIPS
INSULATED SCREWDRIVER 1000 volt VDE - FOR PHILLIPS CROSS

HRC 60

0092.007	**PH 0 x 75**	87,5 x 25,4	30	**6**	8011578952884
0092.110	**PH 1 x 100**	109 x 31,7	70	**6**	8011578952914
0092.210	**PH 2 x 100**	117 x 34,0	86	**6**	8011578952945
0092.315	**PH 3 x 150**	127 x 36,9	146	**6**	8011578952976

Ridotto - Recessed
Ridotto - Recessed

DVE 60900

93 GIRAVITE ISOLATO 1000 volt VDE - PER VITI CROCE POZIDRIV
INSULATED SCREWDRIVER 1000 volt VDE - FOR POZIDRIV CROSS

HRC 60

0093.007	**PZ 0 x 75**	87,5 x 25,4	28	**6**	8011578953003
0093.110	**PZ 1 x 100**	109 x 31,7	68	**6**	8011578953034
0093.210	**PZ 2 x 100**	117 x 34,0	88	**6**	8011578953065
0093.315	**PZ 3 x 150**	127 x 36,9	142	**6**	8011578953096

Ridotto - Recessed
Ridotto - Recessed

DVE 60900

94 SERIE 5 GIRAVITI ISOLATI 1000 volt VDE - cartone
SET 5 INSULATED SCREWDRIVERS 1000 Volt VDE - box

Contenuto-content:
0090.310 3,0 x 0,5 x 100
0090.410 4,0 x 0,8 x 100
0090.512 5,5 x 1,0 x 125
0092.110 PH 1 x 100
0092.210 PH 2 x 100

DVE 60900

0094.010	310 x 180 x 37	474	8011578956714

Zorzo Tecnologie Srl

130 GIRAVITE PER VITI INTAGLIO-MECCANICI - acciaio chrom-vanadium finitura cromata - impugnatura in acetato

SCREWDRIVER FOR SLOTTED HEAD SCREWS-MECHANIC - chrom-vanadium steel chrome plated finish - acetate handle

DIN 5265 ISO 2380

0130.307	3,0 x 0,5 x 75	77 x 21	25	12	8011578901424
0130.310	3,0 x 0,5 x 100	77 x 21	25	12	8011578901455
0130.410	4,0 x 0,8 x 100	91 x 25	50	12	8011578901516
0130.412	4,0 x 0,8 x 125	91 x 25	50	12	8011578901547
0130.510	5,5 x 1,0 x 100	91 x 25	60	12	8011578901608
0130.512	5,5 x 1,0 x 125	91 x 25	60	12	8011578901639
0130.515	5,5 x 1,0 x 150	91 x 25	64	12	8011578901660
0130.610	6,5 x 1,2 x 100	106 x 30	100	12	8011578901691
0130.612	6,5 x 1,2 x 125	106 x 30	100	12	8011578901721
0130.615	6,5 x 1,2 x 150	106 x 30	104	12	8011578901752
0130.815	8,0 x 1,2 x 150	115 x 34	170	6	8011578901783

132 GIRAVITE PER VITI INTAGLIO-LAME PARALLELE - acciaio chrom-vanadium finitura cromata - impugnatura in acetato

SCREWDRIVER FOR SLOTTED HEAD SCREWS-CABINET - chrom-vanadium steel chrome plated finish - acetate handle

DIN 5265 ISO 2380

0132.310	3 x 0,5 x 100	77 x 21	25	12	8011578901844
0132.415	4 x 0,8 x 150	91 x 25	53	12	8011578901905
0132.515	5 x 1,0 x 150	91 x 25	60	12	8011578901967

135 GIRAVITE PER VITI CROCE PHILLIPS - acciaio chrom-vanadium finitura cromata - impugnatura in acetato

SCREWDRIVER FOR PHILLIPS CROSS HEAD SCREWS - chrom-vanadium steel chrome plated finish - acetate handle

DIN 5262 ISO 8764

0135.006	PH 0 x 60 x 3,0	77 x 21	24	12	8011578902056
0135.010	PH 0 x 100 x 3,0	77 x 21	26	12	8011578902087
0135.108	PH 1 x 80 x 4,5	91 x 25	52	12	8011578902117
0135.112	PH 1 x 125 x 4,5	91 x 25	58	12	8011578902148
0135.210	PH 2 x 100 x 6,0	106 x 30	94	12	8011578902179
0135.215	PH 2 x 150 x 6,0	106 x 30	104	12	8011578902209
0135.315	PH 3 x 150 x 8,0	115 x 34	172	6	8011578902230

136 GIRAVITE PER VITI CROCE POZIDRIV - acciaio chrom-vanadium finitura cromata - impugnatura in acetato

SCREWDRIVER FOR POZIDRIV CROSS HEAD SCREWS - chrom-vanadium steel chrome plated finish - acetate handle

DIN 5262 ISO 8764

0136.006	PZ 0 x 60 x 3,0	77 x 21	24	12	8011578902261
0136.108	PZ 1 x 80 x 4,5	91 x 25	52	12	8011578902292
0136.112	PZ 1 x 125 x 4,5	91 x 25	56	12	8011578902322
0136.210	PZ 2 x 100 x 6,0	106 x 30	94	12	8011578902353
0136.215	PZ 2 x 150 x 6,0	106 x 30	104	12	8011578902384
0136.315	PZ 3 x 150 x 8,0	115 x 34	172	6	8011578902414

137A GIRAVITE PER VITI INTAGLIO - acciaio chrom-vanadium finitura cromata - impugnatura in acetato

SCREWDRIVER FOR SLOTTED HEAD SCREWS - chrom-vanadium steel chrome plated finish - acetate handle

EX 118A DIN 5265 ISO 2380

0137.140	4,0 x 0,8 x 30	52 x 30	32	12	8011578902445
0137.160	6,5 x 1,2 x 30	52 x 30	40	12	8011578902476

Forzo Tecnologie Srl

162 GIRAVITE PER VITI INTAGLIO - elettronica - acciaio chrom-vanadium finitura nichelata punta nera - impugnatura in acetato
SCREWDRIVER FOR SLOTTED HEAD SCREWS - electronics - chrom-vanadium steel nickel plated black finished tip - acetate handle

DIN 5265 ISO 2380

0162.105	1,5 x 0,3 x 50	88 x 16	15	12	8011578904661
0162.206	2,0 x 0,4 x 50	88 x 16	15	12	8011578904692
0162.207	2,5 x 0,4 x 50	88 x 16	15	12	8011578904722
0162.310	3,0 x 0,5 x 50	88 x 16	15	12	8011578904753

163 GIRAVITE PER VITI CROCE PHILLIPS - elettronica - acciaio chrom-vanadium finitura nichelata punta nera - impugnatura in acetato
SCREWDRIVER FOR PHILLIPS CROSS HEAD SCREWS - electronics - chrom-vanadium steel nickel plated black finished tip - acetate handle

DIN 5262 ISO 8764

0163.005	PH 000 x 50 x 2,5	88 x 16	15	12	8011578904814
0163.006	PH 00 x 50 x 3,0	88 x 16	15	12	8011578904845
0163.015	PH 0 x 50 x 3,0	88 x 16	15	12	8011578904876

163X GIRAVITE PER ELETTRONICA - per viti torx
SCREWDRIVER FOR ELECTRONIC - torx-head screws

0163.906	TX 6 x 50	82 x 16	13	12	8011578933265
0163.907	TX 7 x 50	82 x 16	13	12	8011578933289
0163.908	TX 8 x 50	82 x 16	13	12	8011578933302
0163.909	TX 9 x 50	82 x 16	13	12	8011578933326
0163.910	TX 10 x 50	82 x 16	14	12	8011578933340
0163.915	TX 15 x 50	82 x 16	16	12	8011578933364
0163.920	TX 20 x 50	82 x 16	18	12	8011578933388

164 SERIE 7 GIRAVITI INTAGLIO E CROCE
SET 7 SCREWDRIVERS SLOT AND CROSS

Contenuto-content:
0162.105 1,5 x 50
0162.206 2 x 50
0162.207 2,5 x 50
0162.310 3 x 50
0163.005 PH 000 x 50
0163.006 PH 00 x 50
0163.015 PH 0 x 50

0164.010	170 x 130 x 25	214	8011578164003

164X SERIE 7 GIRAVITI TORX
SET 7 TORX SCREWDRIVERS

Contenuto-content:
0163.906 6 x 50
0163.907 7 x 50
0163.908 8 x 50
0163.909 9 x 50
0163.910 10 x 50
0163.915 15 x 50
0163.920 20 x 50

0164.910	170 x 130 x 25	206	8011578164034

177 SERIE 5 GIRAVITI - impugnatura bicomponente - intaglio - croce PH - termoformato
SET 5 SCREWDRIVERS - bicomponent handle - slotted - cross PH - thermoformed

Contenuto-content:
0170.410 4 x 100
0170.615 6 x 150
0172.007 PH 0 x 75
0172.108 PH 1 x 100
0172.210 PH 2 x 100

Espositore banco Pz. 12 - Table display Pc. 12

0177.010	315 x 135 x 40	410	12	8011578963125

2020 Tecnologie Srl

184 GIRAVITE PER VITI INTAGLIO - acciaio chrom-vanadium finitura nichelata - impugnatura in acetato
SCREWDRIVER FOR SLOTTED HEAD SCREWS - chrom-vanadium steel nickel plated finish - acetate handle

0184.307	3,0 x 0,5 x 75	69 x 16	16	12	8011578905293
0184.407	4,0 x 0,8 x 75	93 x 21	40	12	8011578905323
0184.510	5,5 x 1,0 x 100	93 x 21	52	12	8011578905354
0184.612	6,5 x 1,2 x 125	102 x 24	76	12	8011578905385

186 GIRAVITE PER VITI CROCE PHILLIPS - acciaio chrom-vanadium finitura nichelata - impugnatura in acetato
SCREWDRIVER FOR PHILLIPS CROSS HEAD SCREWS - chrom-vanadium steel nickel plated finish - acetate handle

0186.006	PH 0 x 60 x 3,0	69 x 16	16	12	8011578905415
0186.108	PH 1 x 80 x 4,5	93 x 21	42	12	8011578905446
0186.210	PH 2 x 100 x 6,0	102 x 24	68	12	8011578905477

188 GIRAVITE PER VITI CROCE POZIDRIV - acciaio chrom-vanadium finitura nichelata - impugnatura in acetato
SCREWDRIVER FOR POZIDRIV CROSS HEAD SCREWS - chrom-vanadium steel nickel plated finish - acetate handle

0188.108	PZ 1 x 80 x 4,5	93 x 21	42	12	8011578905507
0188.210	PZ 2 x 100 x 6,0	102 x 24	72	12	8011578905538

190 SERIE 6 GIRAVITI - termoformato
SET 6 SCREWDRIVERS - thermoformed

Contenuto-content:

0184.307	3 x 75	0184.612	6 x 125
0184.407	4 x 75	0186.108	PH 1 x 80
0184.510	5 x 100	0186.210	PH 2 x 100

Espositore banco Pz. 12 - Table display Pz. 12

0190.010	240 x 90 x 27	320	12	8011578190002

191A SERIE 5 GIRAVITI - cartone
SET 5 SCREWDRIVERS - box

Contenuto-content:

0184.307	3 x 75	0186.108	PH 1 x 80
0184.407	4 x 75	0186.210	PH 2 x 100
0184.612	6 x 125		

0191.010	310 x 180 x 27	392	8011578191108

192 ESPOSITORE 144 GIRAVITI - cartone
DISPLAY STAND 144 SCREWDRIVERS - box

Contenuto-content:

0184.307	3 x 75	Nr. 24	0184.612	6 x 125	Nr. 24
0184.407	4 x 75	Nr. 24	0186.108	PH 1 x 80	Nr. 24
0184.510	5 x 100	Nr. 24	0186.210	PH 2 x 100	Nr. 24

0192.010	470 x 260 x 100	6900	8011578192150

193 ESPOSITORE 144 GIRAVITI - cartone
DISPLAY STAND 144 SCREWDRIVERS - box

Contenuto-content:

0184.307	3 x 75	Nr. 24	0186.006	PH 0 x 60	Nr. 24
0184.407	4 x 75	Nr. 24	0186.108	PH 1 x 80	Nr. 24
0184.612	6 x 125	Nr. 24	0186.210	PH 2 x 100	Nr. 24

0193.010	470 x 260 x 100	6900	8011578193058

Forza Tecnologie srl

206 GIRAVITE REVERSIBILE INTAGLIO-CROCE
REVERSIBLE SCREWDRIVER SLOTTED-CROSS

0206.060	PH 2 x 60 x 6,0	90 x 20	48	12	8011578905682

222 GIRAVITE CERCAFASE
CIRCUIT TESTER SCREWDRIVER

0222.410	4 x 100	95 x 25	32	12	8011578943141

223 GIRAVITE CERCAFASE
CIRCUIT TESTER SCREWDRIVER

0223.306	3 x 60	88 x 21	20	12	8011578943165

225 GIRAVITE CERCAFASE - chrom-vanadium - lama isolata
CIRCUIT TESTER SCREWDRIVER - chrom-vanadium - insulated blade

CE

0225.410	4 x 0,8 x 100	90 x 18	34	12	8011578905897

232 GIRAVITE CERCAFASE - chrom-vanadium - lama isolata
CIRCUIT TESTER SCREWDRIVER - chrom-vanadium - insulated blade

CE

0232.306	3 x 0,5 x 60	75 x 15	22	12	8011578905927

Zorzi Tecnologie Srl

238 PORTAUTENSILI 1/4" - magnetico - prendivite
HOLDER 1/4" - magnetic - Screw cap

		L			
0238.010	1/4"	60	24	6	8011578933401

239 PORTAUTENSILI 1/4" - sgancio rapido - magnetico
HOLDER 1/4" - quick release - magnetic

		L			
0239.010	1/4"	60	30	6	8011578933425

240 PORTAINSERTI CON ANELLO 1/4" - magnetico
HOLDER WITH RING 1/4" - magnetic

DIN 7427

		L				
0240.005	1/4"	50		28	6	8011578960940
0240.010	1/4"	75		36	6	8011578906016
0240.020	1/4"	100		40	6	8011578946685
0240.030	1/4"	150	new	50	6	8011578972561
0240.040	1/4"	200	new	60	6	8011578946685

241 ADATTATORE 1/4"
ADAPTER 1/4"

		L			
0241.014	1/4"	50	15	6	8011578906047
0241.038	3/8"	50	22	6	8011578906078
0241.120	1/2"	50	25	6	8011578949501

243 CHIAVE A BUSSOLA 1/4" - magnetica
NUTSETTERS 1/4" - magnetic

DIN 7424

		L				
0243.060	6	45		18	6	8011578933449
0243.070	7	45		18	6	8011578933463
0243.080	8	45		22	6	8011578933487
0243.100	10	45		24	6	8011578933500
0243.110	11	45		26	6	8011578933524
0243.120	12	45		32	6	8011578933548
0243.130	13	45		32	6	8011578933562
0243.170	17	45	new	40	6	8011578972769
0243.380	3/8"	45		32	6	8011578965884

244 CHIAVE A BUSSOLA 1/4" - lunga - magnetica
NUTSETTERS 1/4" - long - magnetic

		L			
0244.045	4	100	22	6	8011578949525
0244.055	5	100	22	6	8011578949549
0244.065	6	100	23	6	8011578946760
0244.075	7	100	23	6	8011578946807
0244.085	8	100	24	6	8011578946845
0244.105	10	100	29	6	8011578946883
0244.125	12	100	37	6	8011578946944
0244.135	13	100	37	6	8011578947002

245 INSERTO PHILLIPS 1/4" - lungo
BIT PHILLIPS HEAD SCREWS 1/4"

DIN 3128 ISO 1173

		L			
0245.100	PH 1	75	12	6	8011578906108
0245.109	PH 1	90	14	6	8011578945688
0245.115	PH 1	150	22	6	8011578945701
0245.200	PH 2	75	15	6	8011578906139
0245.209	PH 2	90	20	6	8011578945725
0245.215	PH 2	150	34	6	8011578945749

246 INSERTO POZIDRIV 1/4" - lungo
BIT POZIDRIV HEAD SCREWS 1/4"

DIN 3128 ISO 1173

		L			
0246.100	PZ 1	75	12	6	8011578906160
0246.109	PZ 1	90	14	6	8011578945763
0246.115	PZ 1	150	22	6	8011578945787
0246.200	PZ 2	75	15	6	8011578906191
0246.209	PZ 2	90	20	6	8011578945800
0246.215	PZ 2	150	34	6	8011578945824

249 INSERTO PER VITI INTAGLIO 1/4"
BIT FOR SLOTTED HEAD SCREWS 1/4"

DIN 3127 ISO 2351

		L			
0249.400	4	25	4	12	8011578906221
0249.400-100	4	25	4	100	8011578949846
0249.500	5	25	4	12	8011578906252
0249.500-100	5	25	4	100	8011578949860
0249.600	6	25	4	12	8011578906283
0249.600-100	6	25	4	100	8011578949884

Ferro Tecnologie Srl

250 INSERTO CROCE PHILLIPS 1/4" - acciaio legato speciale
BIT PHILLIPS CROSS HEAD SCREWS 1/4" - sp. alloy steel

ACR antiscivolamento/no slip
DIN 3128 ISO 1173

		L			
0250.100	PH 1	25	5	12	8011578906313
0250.100-100	PH 1	25	5	100	8011578949907
0250.200	PH 2	25	5	12	8011578906344
0250.200-100	PH 2	25	5	100	8011578949921
0250.300	PH 3	25	5	12	8011578906375
0250.300-100	PH 3	25	5	100	8011578949945

250T INSERTO PER VITI CROCE PHILLIPS 1/4" - titanium
BIT PHILLIPS CROSS HEAD SCREWS 1/4" - titanium

ACR antiscivolamento/no slip
DIN 3128 ISO 1173

		L			
0250.910	PH 1	25	5	12	8011578934125
0250.920	PH 2	25	5	12	8011578934149
0250.930	PH 3	25	5	12	8011578934163

250Z INSERTO CROCE PHILLIPS 1/4" - TORSION
BIT PH CROSS HEAD SCREWS 1/4" - TORSION

		L				
0250.810	PH 1	25	new	4	12	8011578972608
0250.820	PH 2	25	new	4	12	8011578972622

251 INSERTO CROCE POZIDRIV 1/4"
BIT PZ CROSS HEAD SCREWS 1/4"

ACR antiscivolamento/no slip
DIN 3128 ISO 1173

		L			
0251.100	PZ 1	25	5	12	8011578906405
0251.100-100	PZ 1	25	5	100	8011578949969
0251.200	PZ 2	25	5	12	8011578906436
0251.200-100	PZ 2	25	5	100	8011578949983
0251.300	PZ 3	25	5	12	8011578906467
0251.300-100	PZ 3	25	5	100	8011578960001

251T INSERTO CROCE POZIDRIV 1/4" - titanium
BIT PZ CROSS HEAD SCREWS 1/4" - titanium

ACR antiscivolamento/no slip

		L			
0251.910	PZ 1	25	4	12	8011578934187
0251.920	PZ 2	25	5	12	8011578934200
0251.930	PZ 3	25	5	12	8011578934224

251Z INSERTO CROCE POZIDRIV 1/4" - TORSION
BIT PZ CROSS HEAD SCREWS 1/4" - TORSION

		L				
0251.810	PZ 1	25	new	4	12	8011578906405
0251.820	PZ 2	25	new	4	12	8011578949969

253 INSERTO PER VITI TORX 1/4"
BIT FOR TORX HEAD SCREWS 1/4"

		L			
0253.060	TX 6	25	4	12	8011578947040
0253.070	TX 7	25	4	12	8011578947064
0253.080	TX 8	25	4	12	8011578906498
0253.090	TX 9	25	4	12	8011578906528
0253.100	TX 10	25	4	12	8011578906559
0253.150	TX 15	25	5	12	8011578906580
0253.200	TX 20	25	5	12	8011578906610
0253.250	TX 25	25	5	12	8011578906641
0253.270	TX 27	25	5	12	8011578906672
0253.300	TX 30	25	5	12	8011578906702
0253.400	TX 40	25	5	12	8011578971816

255 INSERTO TORX CON FORO 1/4"
BIT TORX HEAD SCREWS WITH HOLE 1/4"

		L			
0255.060	TX 6	25	4	12	8011578933586
0255.070	TX 7	25	4	12	8011578933609
0255.080	TX 8	25	4	12	8011578932350
0255.090	TX 9	25	4	12	8011578932381
0255.100	TX 10	25	4	12	8011578932411
0255.150	TX 15	25	5	12	8011578932442
0255.200	TX 20	25	5	12	8011578932473
0255.250	TX 25	25	5	12	8011578932503
0255.270	TX 27	25	5	12	8011578932534
0255.300	TX 30	25	5	12	8011578932565
0255.400	TX 40	25	5	12	8011578938666

255Z INSERTO TORX CON FORO 1/4"
BIT TORX HEAD SCREWS WITH HOLE 1/4"

		L			
0255.906	TX 6	50	8	12	8011578945848
0255.907	TX 7	50	8	12	8011578945862
0255.908	TX 8	50	8	12	8011578945886
0255.909	TX 9	50	8	12	8011578945909
0255.910	TX 10	50	8	12	8011578945923
0255.915	TX 15	50	8	12	8011578945947
0255.920	TX 20	50	8	12	8011578945961
0255.925	TX 25	50	10	12	8011578945985
0255.927	TX 27	50	10	12	8011578946005
0255.930	TX 30	50	12	12	8011578946029
0255.940	TX 40	50	12	12	8011578946043

Zenzo Tecnologie srl

256 INSERTO QUADRO 1/4"
BIT-SQUARE 1/4"

0256.100	SQ 1	25	4	12	8011578933623
0256.200	SQ 2	25	5	12	8011578933647
0256.300	SQ 3	25	5	12	8011578943660

258 INSERTO POZIDRIV 1/4"
BIT POZIDRIV HEAD SCREWS 1/4"

DIN 3128 ISO 1173

0258.100	PZ 1	50	11	12	8011578906733
0258.100-100	PZ 1	50	11	100	8011578960025
0258.200	PZ 2	50	11	12	8011578906764
0258.200-100	PZ 2	50	11	100	8011578960049
0258.300	PZ 3	50	11	12	8011578906795
0258.300-100	PZ 3	50	11	100	8011578960063
0258.400	PZ 4	50	12	12	8011578943844

258T INSERTO POZIDRIV 1/4" - titanium
BIT POZIDRIV HEAD SCREWS 1/4" - titanium

DIN 3128 ISO 1173

0258.910	PZ 1	50	new	11	12	8011578960902
0258.920	PZ 2	50	new	11	12	8011578960926

258Z INSERTO POZIDRIV 1/4" - TORSION
BIT POZIDRIV HEAD SCREWS 1/4" - TORSION

DIN 3128 ISO 1173

0258.810	PZ 1	50	new	4	12	8011578972721
0258.820	PZ 2	50	new	4	12	8011578972745

260 INSERTO CROCE PHILLIPS 1/4"
BIT PHILLIPS CROSS HEAD SCREWS 1/4"

DIN 3128 ISO 1173

0260.100	PH 1	50	11	12	8011578906825
0260.100-100	PH 1	50	11	100	8011578960100
0260.200	PH 2	50	11	12	8011578906856
0260.200-100	PH 2	50	11	100	8011578960124
0260.300	PH 3	50	11	12	8011578906887
0260.300-100	PH 3	50	11	100	8011578960148
0260.400	PH 4	50	12	12	8011578946067

260T INSERTO CROCE PHILLIPS 1/4" - titanium
BIT PHILLIPS CROSS HEAD SCREWS 1/4" - titanium

DIN 3128 ISO 1173

0260.910	PH 1	50	new	11	12	8011578960841
0260.920	PH 2	50	new	11	12	8011578960865

260Z INSERTO CROCE PHILLIPS 1/4" - TORSION
BIT PHILLIPS CROSS HEAD SCR. 1/4" - TORSION

DIN 3128 ISO 1173

0260.810	PH 1	50	new	11	12	8011578972684
0260.820	PH 2	50	new	11	12	8011578972707

262 INSERTO PER VITI INTAGLIO 1/4"
BIT FOR SLOTTED HEAD SCREWS 1/4"

0262.400	4	50	11	12	8011578906917
0262.400-100	4	50	11	100	8011578960186
0262.500	5	50	11	12	8011578906948
0262.500-100	5	50	11	100	8011578960209
0262.600	6	50	11	12	8011578906979
0262.600-100	6	50	11	100	8011578960223

263 INSERTO VITI ESAGONO 1/4"
BIT HEXAGON HEAD SCREWS 1/4"

DIN 7426

0263.015	1,5	25	4	12	8011578933685
0263.020	2,0	25	4	12	8011578943585
0263.025	2,5	25	4	12	8011578907006
0263.030	3,0	25	4	12	8011578907037
0263.040	4,0	25	5	12	8011578907099
0263.050	5,0	25	5	12	8011578907129
0263.060	6,0	25	6	12	8011578907150

263Z INSERTO ESAGONO MASCHIO
HEXAGON MALE BIT

DIN 7426

0263.930	3	50	8	12	8011578946081
0263.940	4	50	10	12	8011578946104
0263.950	5	50	12	12	8011578946128
0263.960	6	50	12	12	8011578946142

Tecnologie Srl

266 CASSETTA CACCIAVITE A PERCUSSIONE 1/2" CON 6 INSERTI
SET IMPACT SCREWDRIVER 1/2" WITH 6 BITS

Contenuto-content:
PH 2
PH 3
INTAGLIO - SLOT mm 8
INTAGLIO - SLOT mm 10

0266.010	1100	1	8011578974589

new

1420 ADATTATORE 1/4" portainserti univ. es. 1/4"
ADAPTER COUPLER 1/4" for bit hexagon 1/4"

1/4"

1420.010	14	6	8011578929626

1470 ADATTATORE 3/8" portainserti univ. es. 1/4"
ADAPTER COUPLER 3/8" for bit hexagon 1/4"

3/8"

1470.010	24	6	8011578930370

1520 ADATTATORE 1/2" portainserti univ. es. 1/4"
ADAPTER COUPLER 1/2" for bit hexagon 1/4"

1/2"

1520.010	52	6	8011578949563

264 PORTAINSERTI CON IMPUGNATURA ATTACCO MAGNETICO 1/4" con 6 inserti
MAGNETIC BIT HOLDER WITH HANDLE 1/4" with 6 bits

Contenuto-content:

0249.400	4 x 25	0250.100	PH 1 x 25	0251.100	PZ 1 x 25
0249.500	5 x 25	0250.200	PH 2 x 25	0251.200	PZ 2 x 25

1/4"

		L				
0264.010	1/4"	150	105 x 30	158	2	8011578907181

264A PORTAINSERTI CON IMPUGNATURA ATTACCO MAGNETICO 1/4"
MAGNETIC BIT HOLDER WITH HANDLE 1/4"

		L				
0264.110	1/4"	150	105 x 30	120	6	8011578907211

1/4"

84 PORTAINSERTI MAGNETICO ATTACCO 1/4"
MAGNETIC BIT HOLDER 1/4"

0084.010	1/4"	100	117 x 34	100	6	8011578952648

1/4"

87 PORTAINSERTI FLESSIBILE ATTACCO 1/4"
FLEXIBLE BIT HOLDER 1/4"

1/4"

0087.010	1/4"	190	117 x 34	154	6	8011578952679

con 6 bit / with 6 bits mm 4 - 5 - PH1 - PH2 - PZ1 - PZ2

0087.310	con 6 bit / with 6 bits	190	2	8011578960728

Zorzi Tecnologici srl

270 INSERTO ESAGONO MASCHIO mm 10
HEXAGON MALE BIT mm 10

0270.040	4	75	44	6	8011578946166
0270.050	5	75	44	6	8011578946180
0270.060	6	75	46	6	8011578946203
0270.080	8	75	48	6	8011578946227
0270.100	10	75	51	6	8011578946241

274 INSERTO XZN mm 10
XZN BIT mm 10

0274.005	XZN 5	75	44	6	8011578946425
0274.006	XZN 6	75	46	6	8011578946449
0274.008	XZN 8	75	46	6	8011578946463
0274.010	XZN 10	75	48	6	8011578946487
0274.012	XZN 12	75	62	6	8011578946500

272 INSERTO TORX mm 10
TORX BIT mm 10

0272.020	TX 20	75	44	6	8011578946265
0272.025	TX 25	75	44	6	8011578946289
0272.027	TX 27	75	42	6	8011578946302
0272.030	TX 30	75	44	6	8011578946326
0272.040	TX 40	75	46	6	8011578945664
0272.045	TX 45	75	46	6	8011578946364
0272.050	TX 50	75	48	6	8011578946388
0272.055	TX 55	75	50	6	8011578946401

275 INSERTO RIBE mm 10
RIBE BIT mm 10

0275.005	RIBE 5	75	43	6	8011578946524
0275.006	RIBE 6	75	44	6	8011578946548
0275.007	RIBE 7	75	45	6	8011578946562
0275.008	RIBE 8	75	46	6	8011578946586
0275.009	RIBE 9	75	46	6	8011578946609
0275.010	RIBE 10	75	48	6	8011578946623
0275.012	RIBE 12	75	62	6	8011578946647

276A ADATTATORE PER INSERTI mm 10
ADAPTER FOR BITS mm 10

0276.004	F 3/8" - M 10 mm.28	28	6	8011578947088
0276.006	F 1/2" - M 10 mm.50	50	6	8011578947101

276 CASSETTA 40 INSERTI ESAGONO-TORX-XZN 10 mm 3/8" - 1/2" - acciaio chrom-vanadium
SET 40 BITS HEX-TORX-XZN 10 mm 3/8" - 1/2" chrom-vanadium steel

3/8" 1/2"

Contenuto-content:

0276.004	0272.050	0272.020
0276.006	0272.055	0272.025
0270.040	0274.005	0272.030
0270.050	0274.006	0272.040
0270.060	0274.008	0272.045
0270.070	0274.010	0272.050
0270.080	0274.012	0272.055
0270.100	0271.040	0274.005
0270.120	0271.050	0274.006
0272.020	0271.060	0274.008
0272.025	0271.070	0274.010
0272.030	0271.080	0274.012
0272.040	0271.100	
0272.045	0271.120	

0276.010	330 x 130 x 40	1700	1	8011578947125

Zorzi Tecnologie Srl

278 CHIAVE A BUSSOLA ESAGONALE LAMA FLESSIBILE CON IMPUGNATURA
HEXAGONAL SOCKET WITH FLEXIBLE BLADE WITH HANDLE

		L				
0278.050	5,0	170	105 x 30	153	6	8011578907365
0278.055	5,5	170	105 x 30	126	6	8011578907396
0278.060	6,0	170	105 x 30	154	6	8011578907426
0278.070	7,0	170	105 x 30	150	6	8011578907457
0278.080	8,0	170	105 x 30	150	6	8011578907488
0278.090	9,0	170	105 x 30	153	6	8011578907518
0278.100	10,0	170	105 x 30	154	6	8011578907549
0278.110	11,0	170	105 x 30	135	6	8011578907570
0278.120	12,0	170	105 x 30	135	6	8011578907600
0278.130	13,0	170	105 x 30	141	6	8011578907631

303A SPUNTONE - punta quadra - impugnatura acetato
PUNCH - square tip - acetate handle

	Ø X				
0303.110	8 x 95	75 x 37	89	12	8011578907907

303B SPUNTONE - punta tonda - impugnatura acetato
PUNCH - round tip - acetate handle

	Ø X				
0303.210	8 x 95	75 x 37	90	12	8011578907938

304A PUNTERUOLO - punta quadra - impugnatura acetato
PUNCH - square tip - acetate handle

	Ø X				
0304.110	6 x 90	102 x 24	65	12	8011578907969

304B PUNTERUOLO - punta tonda - impugnatura acetato
PUNCH - round tip - acetate handle

	Ø X				
0304.210	6 x 90	102 x 24	62	12	8011578907990

Zorzo Tecnologie srl

305A
PUNTERUOLO - punta quadra - impugnatura acetato
PUNCH - square tip - acetate handle

	Ø X				
0305.110	4 x 65	93 x 21	36	12	8011578908027

305B
PUNTERUOLO - punta tonda - impugnatura acetato
PUNCH - round tip - acetate handle

	Ø X				
0305.210	4 x 65	93 x 21	37	12	8011578908058

307
LEVACHIODI PER LEVASEMENZE - impugnatura acetato
NAILS PULLER - acetate handle

	Ø X				
0307.010	6 x 70	102 x 24	66	12	8011578908089

310
LEVACHIODI PER CALZOLAI - impugnatura acetato
NAILS PULLER FOR SHOEMAKERS - acetate handle

	Ø X				
0310.010	8 x 80	98 x 35	116	12	8011578908119

311
LEVACHIODI PER TAPPEZZIERI - impugnatura acetato
NAILS PULLER FOR UPHOLSTERERS - acetate handle

0311.010	95	98 x 35	139	12	8011578908140

313
LEVAPUNTI - impugnatura acetato
PULLER - acetate handle

0313.010	80	98 x 35	132	12	8011578908171

Zerzo Tecnologie srl

316 CHIAVE A BUSSOLA CON IMPUGNATURA ACETATO - acciaio chrom-vanadium
SOCKET WITH ACETATE HANDLE - chrom-vanadium steel

DIN 3125

0316.040	**4,0 x 80**	102 x 24	48	**6**	8011578908201
0316.050	**5,0 x 80**	102 x 24	48	**6**	8011578908232
0316.055	**5,5 x 80**	102 x 24	48	**6**	8011578908263
0316.060	**6,0 x 80**	102 x 24	66	**6**	8011578908294
0316.070	**7,0 x 80**	102 x 24	111	**6**	8011578908324
0316.080	**8,0 x 80**	102 x 24	111	**6**	8011578908355
0316.090	**9,0 x 80**	102 x 24	111	**6**	8011578908386
0316.100	**10,0 x 80**	114 x 28	116	**6**	8011578908416
0316.110	**11,0 x 80**	114 x 28	122	**6**	8011578908447
0316.120	**12,0 x 80**	114 x 28	138	**6**	8011578908478
0316.130	**13,0 x 80**	114 x 28	143	**6**	8011578908508
0316.140	**14,0 x 80**	114 x 28	133	**6**	8011578908539

318 CHIAVE A BUSSOLA CON IMPUGNATURA ACETATO - foro profondo - acciaio chrom-vanadium
SOCKET WITH ACETATE HANDLE - deep hole - chrom-vanadium steel

0318.050	**5,0 x 115**	114 x 28	112	**6**	8011578947149
0318.055	**5,5 x 115**	114 x 28	110	**6**	8011578947163
0318.060	**6,0 x 115**	114 x 28	110	**6**	8011578943561
0318.070	**7,0 x 115**	114 x 28	104	**6**	8011578908591
0318.080	**8,0 x 115**	114 x 28	135	**6**	8011578908621
0318.090	**9,0 x 115**	114 x 28	114	**6**	8011578908652
0318.100	**10,0 x 115**	114 x 28	161	**6**	8011578908683
0318.110	**11,0 x 115**	114 x 28	150	**6**	8011578943684
0318.120	**12,0 x 115**	114 x 28	132	**6**	8011578947200
0318.130	**13,0 x 115**	114 x 28	208	**6**	8011578908713
0318.140	**14,0 x 115**	114 x 28	148	**6**	8011578947224

82 CHIAVE A BUSSOLA ESAGONO FORO PROFONDO
DEEP HOLE HEXAGON SOCKET

0082.050	**5,0 x 37**	117 x 34	118	**6**	8011578952310
0082.055	**5,5 x 37**	117 x 34	118	**6**	8011578952341
0082.060	**6,0 x 37**	117 x 34	118	**6**	8011578952372
0082.070	**7,0 x 72**	117 x 34	136	**6**	8011578952402
0082.080	**8,0 x 72**	117 x 34	126	**6**	8011578952433
0082.090	**9,0 x 72**	117 x 34	128	**6**	8011578952464
0082.100	**10,0 x 72**	117 x 34	126	**6**	8011578952495
0082.110	**11,0 x 72**	117 x 34	158	**6**	8011578952525
0082.120	**12,0 x 72**	117 x 34	146	**6**	8011578952556
0082.130	**13,0 x 72**	117 x 34	152	**6**	8011578952587

Polo Tecnologie Srl

78 CHIAVE MASCHIO ESAGONALE SFERICA
SPHERICAL HEXAGONAL MALE WRENCH

HRC 60

0078.025	**2,5 x 75**	87,5 x25,4	28	**6**	8011578952082
0078.030	**3,0 x 75**	87,5 x25,4	28	**6**	8011578952105
0078.040	**4,0 x 100**	109 x31,7	60	**6**	8011578952136
0078.050	**5,0 x 100**	109 x31,7	70	**6**	8011578952167
0078.060	**6,0 x 125**	117 x34,0	94	**6**	8011578952198

340 CHIAVE MASCHIO ESAGONALE CON IMPUGNATURA ACETATO - acciaio chrom-vanadium finitura brunita
HEXAGONAL MALE WRENCH WITH ACETATE HANDLE - chrom-vanadium steel burnished finish

0340.015	**1,5 x 70**	77 x 21	20	**6**	8011578943066
0340.020	**2,0 x 70**	77 x 21	22	**6**	8011578908928
0340.025	**2,5 x 80**	77 x 21	23	**6**	8011578908959
0340.030	**3,0 x 100**	77 x 21	26	**6**	8011578908980
0340.040	**4,0 x 100**	91 x 25	47	**6**	8011578909017
0340.050	**5,0 x 120**	91 x 25	65	**6**	8011578909048
0340.060	**6,0 x 140**	106 x 30	98	**6**	8011578909079
0340.080	**8,0 x 150**	115 x 34	182	**6**	8011578909109

340A SERIE 5 CHIAVI MASCHIO CON IMPUGNATURA ACETATO - cartone
SET 5 MALE WRENCHES WITH ACETATE HANDLE - box

Contenuto-content:
0340.020 2
0340.030 3
0340.040 4
0340.050 5
0340.060 6

0340.110	310 x 180 x 37	418	8011578340193

341 CHIAVE MASCHIO QUADRATA CON IMPUGNATURA ACETATO - acciaio chrom-vanadium finitura cromata punta nera
SQUARE MALE WRENCH WITH ACETATE HANDLE - chrom-vanadium steel chrome plated black finished tip

0341.100	**SQ 1-4 x 100**	91 x 25	61	**12**	8011578909161
0341.200	**SQ 2-5 x 125**	106 x 30	89	**12**	8011578909192
0341.300	**SQ 3-6 x 150**	106 x 30	98	**12**	8011578909222

75 GIRAVITE PER VITI TORX CON FORO
SCREWDRIVER FOR TORX WITH HOLE HEAD SCREWS

HRC 60

0075.060	**TX 6 x 60**	87,5 x 25,4	28	**6**	8011578951740
0075.070	**TX 7 x 60**	87,5 x 25,4	28	**6**	8011578951771
0075.080	**TX 8 x 60**	87,5 x 25,4	30	**6**	8011578951801
0075.090	**TX 9 x 60**	109 x 31,7	56	**6**	8011578951832
0075.100	**TX 10 x 80**	109 x 31,7	58	**6**	8011578951863
0075.150	**TX 15 x 80**	109 x 31,7	60	**6**	8011578951894
0075.200	**TX 20 x 100**	109 x 31,7	62	**6**	8011578951924
0075.250	**TX 25 x 100**	109 x 31,7	70	**6**	8011578951955
0075.270	**TX 27 x 100**	109 x 31,7	66	**6**	8011578951986
0075.300	**TX 30 x 100**	117 x 34,0	88	**6**	8011578952013
0075.400	**TX 40 x 125**	127 x 36,9	138	**6**	8011578952044
0075.450	**TX 45 x 125**	127 x 36,9	138	**6**	8011578952075

Zolzo Tecnologie Srl

343

CHIAVE PER VITI TORX CON IMPUGNATURA ACETATO - acciaio chrom-vanadium finitura cromata punta nera
WRENCH FOR TORX-HEAD SCREWS WITH ACETATE HANDLE - chrom-vanadium steel chrome plated black finished tip

0343.060	**TX 6 x 70**	77 x 21	24	**6**	8011578909550
0343.070	**TX 7 x 70**	77 x 21	24	**6**	8011578909581
0343.080	**TX 8 x 80**	77 x 21	22	**6**	8011578909611
0343.090	**TX 9 x 80**	77 x 21	27	**6**	8011578909642
0343.100	**TX 10 x 80**	77 x 21	28	**6**	8011578909673
0343.150	**TX 15 x 100**	91 x 25	46	**6**	8011578909703
0343.200	**TX 20 x 100**	91 x 25	48	**6**	8011578909734
0343.250	**TX 25 x 100**	91 x 25	56	**6**	8011578909765
0343.270	**TX 27 x 120**	106 x 30	84	**6**	8011578909796
0343.300	**TX 30 x 120**	106 x 30	96	**6**	8011578909826
0343.400	**TX 40 x 140**	115 x 34	150	**6**	8011578909857
0343.450	**TX 45 x 140**	115 x 34	151	**6**	8011578909888

343D

SERIE 5 CHIAVI TORX CON IMPUGNATURA ACETATO - cartone
SET 5 TORX WRENCHES WITH ACETATE HANDLE - box

Contenuto-content:

0343.100	TX 10 x 80	0343.250	TX 25 x 100
0343.150	TX 15 x 100	0343.300	TX 30 x 120
0343.200	TX 20 x 100		

0343.490	310 x 180 x 37	423	8011578343279

343H

CHIAVE PER VITI TORX CON FORO CON IMPUGNATURA ACETATO - acc. chrom-vanadium fin. cromata punta nera
WRENCH TORX HEAD SCREWS WITH HOLE WITH ACETATE HANDLE - chrom-vanadium steel chrome plated black fin. tip

0343.605	**TX 5 x 60**	77 x 21	24	**6**	8011578933708
0343.606	**TX 6 x 60**	77 x 21	26	**6**	8011578933722
0343.607	**TX 7 x 60**	77 x 21	24	**6**	8011578933746
0343.608	**TX 8 x 60**	77 x 21	24	**6**	8011578933760
0343.609	**TX 9 x 60**	77 x 21	23	**6**	8011578909970
0343.610	**TX 10 x 80**	77 x 21	29	**6**	8011578910006
0343.615	**TX 15 x 80**	91 x 25	46	**6**	8011578910037
0343.620	**TX 20 x 100**	91 x 25	48	**6**	8011578910068
0343.625	**TX 25 x 100**	91 x 25	56	**6**	8011578910099
0343.627	**TX 27 x 115**	106 x 30	83	**6**	8011578910129
0343.630	**TX 30 x 115**	106 x 30	96	**6**	8011578910150
0343.640	**TX 40 x 130**	115 x 34	152	**6**	8011578910181

343HT

SERIE 5 CHIAVI TORX CON FORO CON IMPUGNATURA ACETATO - cartone
SET 5 WRENCHES FOR TORX HEAD SCREWS WITH HOLE WITH ACETATE HANDLE - box

Contenuto-content:

0343.610	TX 10	0343.625	TX 25
0343.615	TX 15	0343.630	TX 30
0343.620	TX 20		

0343.690	310 x 180 x 37	425	8011578343774

343TT

ESPOSITORE 57 CHIAVI TORX - con foro
DISPLAY STAND 57 TORX WRENCHES - with hole

Contenuto-content:

0343.606	TX 6	Nr. 5	0343.620	TX 20	Nr. 5
0343.607	TX 7	Nr. 5	0343.625	TX 25	Nr. 5
0343.608	TX 8	Nr. 5	0343.627	TX 27	Nr. 5
0343.609	TX 9	Nr. 5	0343.630	TX 30	Nr. 4
0343.610	TX 10	Nr. 5	0343.640	TX 40	Nr. 4
0343.615	TX 15	Nr. 5	0343.450	TX 45	Nr. 4

0343.710	410 x 230 x 200	10200	8011578343798

Forze Tecnologie Srl

344 CHIAVE MASCHIO ESAGONALE CON IMPUGNATURA A "T" BICOMPONENTE - acciaio chrom-vanadium finitura cromata
HEXAGONAL MALE WRENCH WITH "T" BICOMPONENT HANDLE - chrom-vanadium steel chrome plated finish

0344.020	2,0 x 100	140 x 65	14	6	8011578910242
0344.025	2,5 x 100	140 x 65	14	6	8011578910273
0344.030	3,0 x 100	145 x 65	22	6	8011578910303
0344.040	4,0 x 150	210 x 90	57	6	8011578910365
0344.050	5,0 x 150	210 x 90	72	6	8011578910426
0344.060	6,0 x 150	210 x 90	88	6	8011578910457
0344.080	8,0 x 160	230 x 115	178	6	8011578910518
0344.100	10,0 x 180	260 x 120	268	6	8011578910570

344A SERIE 7 CHIAVI ESAGONO A "T"
SET 7 HEXAGON WRENCHES "T" HANDLE

Contenuto-content:

0344.020	2	0344.050	5
0344.025	2,5	0344.060	6
0344.030	3	0344.080	8
0344.040	4		

0344.110	370 x 210 x 40	660	8011578960742

344X CHIAVE MASCHIO TORX CON IMPUGNATURA A "T"
TORX WRENCH WITH "T" HANDLE

0344.206	TX 6 x 100	140 x 65	22	6	8011578933784
0344.207	TX 7 x 100	140 x 65	22	6	8011578933807
0344.208	TX 8 x 100	140 x 65	22	6	8011578933821
0344.209	TX 9 x 100	140 x 65	22	6	8011578933845
0344.210	TX 10 x 100	140 x 65	22	6	8011578933869
0344.215	TX 15 x 100	140 x 65	27	6	8011578933883
0344.220	TX 20 x 100	160 x 90	50	6	8011578933906
0344.225	TX 25 x 150	210 x 95	61	6	8011578933920
0344.227	TX 27 x 150	210 x 95	69	6	8011578933944
0344.230	TX 30 x 150	210 x 95	77	6	8011578933968
0344.240	TX 40 x 200	260 x 95	120	6	8011578933982

344XT SERIE 7 CHIAVI TORX A "T"
SET 7 TORX WRENCHES "T" HANDLE

Contenuto-content:

0344.206	TX 6	0344.220	TX 20
0344.208	TX 8	0344.225	TX 25
0344.210	TX 10	0344.230	TX 30
0344.215	TX 15		

0344.280	370 x 210 x 40	490	8011578344580

Zeno Tecnologie srl

344F

CHIAVE TRE ESTREMITÀ ASTA SCORREVOLE MASCHIO ESAGONALI - acc. chrom-vanadium fin. cromata punte nere
HEXAGONAL MALE THREE ENDS WRENCH SLIDING BAR - chrom-vanadium steel chrome plated black finished tips

0344.320	**2,0**	65 x 130	22	**6**	8011578910600
0344.325	**2,5**	65 x 130	22	**6**	8011578910631
0344.330	**3,0**	65 x 150	22	**6**	8011578910662
0344.340	**4,0**	90 x 180	64	**6**	8011578910723
0344.350	**5,0**	90 x 180	66	**6**	8011578910785
0344.360	**6,0**	105 x 215	134	**6**	8011578910815
0344.380	**8,0**	125 x 250	224	**2**	8011578910877
0344.391	**10,0**	145 x 300	382	**2**	8011578910938
0344.392	**12,0**	165 x 315	575	**2**	8011578910969
0344.394	**14,0**	170 x 340	822	**2**	8011578910990

344FZ

SERIE 6 CHIAVI ESAGONO TRE TESTE - cartone
SET 6 HEXAGON THREE HEADS WRENCHES - box

Contenuto - content:

0344.320	mm 2	0344.350	mm 5
0344.325	mm 2,5	0344.360	mm 6
0344.330	mm 3		
0344.340	mm 4		

0344.398	370 x 210 x 40	546	8011578344924

344FT

SERIE 10 CHIAVI ESAGONO TRE TESTE
SET 10 T HEXAGON THREE HEADS WRENCHES

Contenuto - content:

0344.320	mm 2	0344.360	mm 6
0344.325	mm 2,5	0344.380	mm 8
0344.330	mm 3	0344.391	mm 10
0344.340	mm 4	0344.392	mm 12
0344.350	mm 5	0344.394	mm 14

0344.399		2334	8011578344948

344T

CHIAVE TRE TESTE TORX ASTA SCORREVOLE
TORX THREE HEADS WRENCH SLIDING BAR

0344.406	**TX 6**	65 x 125	22	**6**	8011578943226
0344.407	**TX 7**	65 x 125	22	**6**	8011578943240
0344.408	**TX 8**	65 x 125	22	**6**	8011578943264
0344.409	**TX 9**	65 x 125	23	**6**	8011578943288
0344.410	**TX 10**	65 x 125	23	**6**	8011578943301
0344.415	**TX 15**	65 x 125	23	**6**	8011578943325
0344.420	**TX 20**	65 x 125	23	**6**	8011578943349
0344.425	**TX 25**	90 x 180	66	**6**	8011578943363
0344.427	**TX 27**	90 x 180	66	**2**	8011578943387
0344.430	**TX 30**	90 x 180	66	**2**	8011578943400
0344.440	**TX 40**	105 x 210	138	**2**	8011578943424
0344.445	**TX 45**	105 x 210	138	**2**	8011578943448

Zorzo Tecnologie srl

344TZ

SERIE 6 CHIAVI TRE TESTE TORX - cartone
SET 6 TORX THREE HEADS WRENCHES - box

Contenuto-content:
0344.408 TX 8
0344.410 TX 10
0344.415 TX 15
0344.420 TX 20
0344.425 TX 25
0344.430 TX 30

	L		
0344.480	310 x 180 x 37	435	8011578344962

344TX

SERIE 12 CHIAVI TRE TESTE TORX
SET 12 TORX THREE HEADS WRENCHES

Contenuto-content:

0344.406	TX 6	0344.420	TX 20
0344.407	TX 7	0344.425	TX 25
0344.408	TX 8	0344.427	TX 27
0344.409	TX 9	0344.430	TX 30
0344.410	TX 10	0344.440	TX 40
0344.415	TX 15	0344.445	TX 45

0344.490	620	8011578344986

345

CHIAVE MASCHIO ESAGONALE - professionale - acciaio chrom-vanadium finitura cromata
HEXAGONAL MALE WRENCH - professional - chrom vanadium steel crome plated

DIN ISO 2936

		L				
0345.015	**1,5**	45 x 14	2	**12**	8011578911027	
0345.020	**2,0**	50 x 16	3	**12**	8011578911058	
0345.025	**2,5**	56 x 18	4	**12**	8011578911089	
0345.030	**3,0**	63 x 20	5	**12**	8011578911119	
0345.035	**3,5**	66 x 22	7	**12**	8011578911140	
0345.040	**4,0**	70 x 25	10	**12**	8011578911171	
0345.050	**5,0**	80 x 28	18	**12**	8011578911232	
0345.060	**6,0**	90 x 32	30	**12**	8011578911294	
0345.070	**7,0**	95 x 34	42	**12**	8011578911324	
0345.080	**8,0**	100 x 36	61	**12**	8011578911355	
0345.090	**9,0**	100 x 36	76	**12**	8011578911386	new
0345.100	**10,0**	112 x 40	106	**12**	8011578911416	
0345.120	**12,0**	125 x 45	172	**12**	8011578911447	
0345.130	**13,0**	130 x 45	225	**12**	8011578911478	new
0345.140	**14,0**	140 x 56	264	**6**	8011578911508	
0345.170	**17,0**	160 x 63	443	**6**	8011578911539	
0345.190	**19,0**	180 x 70	600	**6**	8011578911560	
0345.220	**22,0**	230 x 110	932	**2**	8011578934026	
0345.240	**24,0**	235 x 110	1193	**2**	8011578934040	
0345.270	**27,0**	240 x 110	1300	**2**	8011578974923	new

345Z

CHIAVE MASCHIO ESAGONO professionale tipo LUNGO - acciaio chrom-vanadium finitura cromata
HEXAGONAL MALE WRENCH PROFESSIONAL LONG TYPE - chrom vanadium steel crome plated

		L				
0345.920	**2.0**	16 x 100	4	**12**	8011578974947	new
0345.925	**2.5**	18 x 112	5	**12**	8011578974961	new
0345.930	**3.0**	20 x 127	5	**12**	8011578974985	new
0345.940	**4.0**	25 x 141	12	**12**	8011578975005	new
0345.950	**5.0**	28 x 161	19	**12**	8011578975029	new
0345.960	**6.0**	32 x 181	25	**12**	8011578975043	new
0345.980	**8.0**	36 x 200	64	**12**	8011578975067	new
0345.981	**10.0**	40 x 226	110	**12**	8011578975081	new

Zorzi Tecnologie Srl

346 SERIE 7 CHIAVI MASCHIO ESAGONALE - clip in plastica
SET 7 HEXAGONAL MALE WRENCHES - plastic clip

Contenuto-content:
0345.015 1,5
0345.020 2
0345.025 2,5
0345.030 3
0345.040 4
0345.050 5
0345.060 6

0346.070	94	6	8011578346003

347 SERIE 9 CHIAVI MASCHIO ESAGONALE - clip in plastica
SET 9 HEXAGONAL MALE WRENCHES - plastic clip

Contenuto-content:

0345.015	1,5	0345.030	3	0345.060	6
0345.020	2	0345.040	4	0345.080	8
0345.025	2,5	0345.050	5	0345.100	10

0347.090	291	6	8011578347000

350 CHIAVE MASCHIO ESAGONALE LUNGA ESTREMITÀ SFERICA - acciaio chrom-vanadium
LONG SPHERICAL END HEXAGONAL MALE WRENCH - chrom-vanadium steel

		L			
0350.015	1,5	80 x 16	2	6	8011578934064
0350.020	2,0	83 x 16	3	6	8011578911652
0350.025	2,5	93 x 20	5	6	8011578911683
0350.030	3,0	98 x 20	8	6	8011578911713
0350.040	4,0	110 x 30	12	6	8011578911744
0350.050	5,0	123 x 38	25	6	8011578911775
0350.060	6,0	140 x 38	41	6	8011578911805
0350.080	8,0	156 x 36	85	6	8011578911867
0350.100	10,0	170 x 40	142	6	8011578911898

351 SERIE 9 CHIAVI ESAGONALI LUNGHE ESTREMITÀ SFERICA - clip in plastica
SET 9 LONG SPHERICAL END HEXAGONAL WRENCHES - plastic clip

Contenuto-content:

0350.015	1,5	0350.030	3	0350.060	6
0350.020	2	0350.040	4	0350.080	8
0350.025	2,5	0350.050	5	0350.100	10

0351.090	380	6	8011578351007

352 SERIE 9 CHIAVI ESAGONALI LUNGHE ESTREMITÀ SFERICA - clip in plastica - EXTRA LUNGA
SET 9 EXTRA LONG SPHERICAL END HEXAGONAL WRENCHES - plastic clip - EXTRA LONG

Contenuto-content:

0352.010	1,5	0352.030	3	0352.060	6
0352.020	2	0352.040	4	0352.080	8
0352.025	2,5	0352.050	5	0352.100	10

0352.090	410	6	8011578947422

Zorzo Tecnologie Srl

355 CHIAVE MASCHIO ESAGONO tipo STANDARD - acciaio carbonio temperato - finitura zincata
HEXAGONAL MALE WRENCH - type STANDARD - carbon steel hardness - zinc finish

DIN 911 / NI 6753

0355.015	**1,5**	50 x 16	3	**12**	8011578911942
0355.020	**2,0**	50 x 16	3	**12**	8011578911959
0355.025	**2,5**	56 x 18	4	**12**	8011578911980
0355.030	**3,0**	63 x 20	5	**12**	8011578912017
0355.035	**3,5**	70 x 25	8	**12**	8011578912048
0355.040	**4,0**	70 x 25	11	**12**	8011578912079
0355.045	**4,5**	80 x 28	14	**12**	8011578912109
0355.050	**5,0**	80 x 28	18	**12**	8011578912130
0355.055	**5,5**	30 x 32	24	**12**	8011578912161
0355.060	**6,0**	90 x 32	23	**12**	8011578912192
0355.070	**7,0**	95 x 36	41	**12**	8011578912222
0355.080	**8,0**	100 x 36	60	**12**	8011578912253
0355.090	**9,0**	112 x 40	78	**12**	8011578912284
0355.100	**10,0**	112 x 40	103	**12**	8011578912314

confezione in scatolone - packaging in parcel:

0355.020-1000	**2,0**	50 x 16	2000	**1000**	8011578972843
0355.025-1000	**2,5**	56 x 18	3200	**1000**	8011578972967
0355.030-1000	**3,0**	63 x 20	5000	**1000**	8011578972981
0355.040-1000	**4,0**	70 x 25	10300	**1000**	8011578973001
0355.050-1000	**5,0**	80 x 28	18500	**1000**	8011578973025
0355.060-500	**6,0**	90 x 32	15000	**500**	8011578973049
0355.080-200	**8,0**	100 x 36	12000	**200**	8011578973063
0355.100-100	**10,0**	112 x 40	10500	**100**	8011578973087

(richiedi prezzo per quantità)
(ask price for quantity)

356 SERIE 6 CHIAVI ESAGONO
SET 6 HEXAGON WRENCHES

Contenuto-content: (2 - 2,5 - 3 - 4 - 5 - 6)

0356.010	189	**6**	8011578912345

357 SERIE 6 CHIAVI TORX
SET 6 TORX WRENCHES

Contenuto-content: (TX 10 - 15 - 20 - 25 - 27 - 30)

0357.015	92	**6**	8011578357016

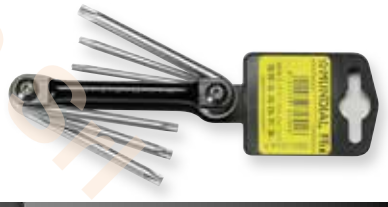

Xylon Tecnologie Srl

360 CHIAVE PER VITI TORX - acciaio chrom-vanadium
WRENCH FOR TORX HEAD SCREWS - chrom-vanadium steel

		L			
0360.060	TX 6	42 x 16	2	6	8011578912406
0360.070	TX 7	48 x 16	3	6	8011578912437
0360.080	TX 8	48 x 16	3	6	8011578912468
0360.090	TX 9	48 x 16	3	6	8011578912499
0360.100	TX 10	51 x 17	4	6	8011578912529
0360.150	TX 15	54 x 18	5	6	8011578912550
0360.200	TX 20	62 x 19	7	6	8011578912581
0360.250	TX 25	60 x 20	10	6	8011578912611
0360.270	TX 27	64 x 21	13	6	8011578912642
0360.300	TX 30	70 x 24	20	6	8011578912673
0360.400	TX 40	76 x 26	30	6	8011578912703
0360.450	TX 45	82 x 28	43	6	8011578912734
0360.500	TX 50	105 x 42	64	6	8011578934088

362 SERIE 9 CHIAVI TORX - clip in plastica
SET 9 TORX WRENCHES - plastic clip

Contenuto-content:
0360.100 10
0360.150 15
0360.200 20
0360.250 25
0360.270 27
0360.300 30
0360.400 40
0360.450 45
0360.500 50

0362.090	284	6	8011578362010

366 SERIE 9 CHIAVI TORX CON FORO LUNGHE - clip in plastica
SET 9 LONG TORX WRENCHES WITH HOLE - plastic clip

Contenuto-content:
0361.100 10 75 x 17
0361.150 15 83 x 18
0361.200 20 92 x 19
0361.250 25 100 x 20
0361.270 27 110 x 25
0361.300 30 125 x 29
0361.400 40 140 x 37
0361.450 45 150 x 37
0361.500 50 170 x 42

0366.090	346	6	8011578366018

Zorzo Tecnologie Srl

370 MAZZUOLA TESTE IN POLIURETANO - manico legno
MALLET WITH POLYURETHANE HEAD - wooden handle

UNI 7784

	Ø	L			
0370.022	22	250	168	4	8011578912826
0370.028	28	280	263	4	8011578912857
0370.035	35	310	408	4	8011578912888
0370.042	42	320	610	4	8011578912918
0370.050	50	360	954	2	8011578912949
0370.060	60	380	1402	2	8011578912970

371 RICAMBI PER MAZZUOLA - poliuretano
SPARE FOR MALLET - polyurethane

alla coppia - in couple

	Ø			
0371.022	22	12	6	8011578913007
0371.028	28	34	6	8011578913038
0371.035	35	60	6	8011578913069
0371.042	42	90	6	8011578913090
0371.050	50	124	6	8011578913120
0371.060	60	200	6	8011578913151

372 MAZZUOLA GOMMA NERA - manico legno antisfilamento
BLACK RUBBER MALLET - wooden handle no-unthreading

DIN 5128

	Gr.	Ø	L			
0372.030	300	50	320	382	4	8011578913182
0372.050	500	60	340	570	4	8011578913212
0372.080	800	70	380	862	2	8011578913243

373 MAZZUOLA GOMMA BIANCA - manico legno antisfilamento
WHITE RUBBER MALLET - wooden handle no-unthreading

DIN 5128

	Gr.	Ø	L			
0373.030	300	50	320	426	4	8011578913274
0373.050	500	60	345	622	4	8011578938628
0373.080	800	70	350	814	2	8011578938642

373Z MAZZUOLA RAME - manico legno
COPPER MALLET - wooden handle

	Gr.			
0373.905	500	580	2	8011578965921
0373.908	800	900	2	8011578965945
0373.910	1000	1150	2	8011578965969
0373.915	1500	1600	2	8011578965983

Zeta Tecnologie srl

374 MAZZUOLA ANTIRIMBALZO
NO REBOUND MALLET

	Gr.	Ø	L			
0374.050	500	44	300	504	4	8011578943981
0374.060	600	49	310	650	4	8011578944001
0374.080	800	50	340	866	2	8011578944025
0374.100	1000	60	380	1120	2	8011578944049

375 MAZZUOLA ANTIRIMBALZO - manico legno
NO REBOUND MALLET - wooden handle

	Ø	L			
0375.030	30	100 x 350	354	4	8011578963521
0375.035	35	120 x 370	534	4	8011578963545
0375.040	40	125 x 375	632	4	8011578963569
0375.050	50	145 x 380	978	2	8011578963583
0375.060	60	150 x 450	1750	2	8011578963606

376 MAZZUOLA ANTIRIMBALZO - manico acciaio
NO REBOUND MALLET - steel handle

	Ø	L			
0376.035	35	122 x 295	610	4	8011578963620
0376.040	40	125 x 305	710	4	8011578963644
0376.050	50	145 x 365	1120	2	8011578963668
0376.060	60	150 x 375	1732	2	8011578963682

376 RICAMBI PER MAZZUOLE per art. 375-376 - poliuretano
SPARE FOR MALLETS for art. 375-376 - polyurethane

alla coppia - in couple

	Ø			
0376.130	30	30	6	8011578963705
0376.135	35	48	6	8011578963729
0376.140	40	70	6	8011578963743
0376.150	50	132	6	8011578963767
0376.160	60	172	6	8011578963781

Zorzo Tecnologie srl

377 MARTELLO PER MECCANICI - acciaio al carbonio - finitura verniciata - manico legno
HAMMER FOR MECHANIC - carbon steel - varnished finish - wooden handle

DIN 1041

	Gr.	L			
0377.010	100	260	170	6	8011578913366
0377.020	200	280	254	6	8011578913397
0377.030	300	300	377	6	8011578913427
0377.040	400	310	504	6	8011578913458
0377.050	500	320	588	6	8011578913489
0377.060	600	330	682	6	8011578913519
0377.080	800	350	996	4	8011578913540
0377.100	1000	350	1118	4	8011578913571
0377.150	1500	380	1600	2	8011578913601
0377.200	2000	400	2100	2	8011578913663

378 MANICO PER MARTELLO
HANDLE FOR HAMMER

	Gr.	L		
0378.010	100	260	40	8011578913694
0378.020	200	280	62	8011578913724
0378.030	300	300	73	8011578913755
0378.040	400	310	78	8011578913786
0378.050	500	320	125	8011578913816
0378.060	600	330	123	8011578913847
0378.080	800	350	142	8011578913878
0378.100	1000	360	162	8011578913908
0378.150	1500	375	168	8011578942083
0378.200	2000	400	194	8011578942106

380 MARTELLO PER MECCANICI - acciaio carbonio finitura verniciata - manico sintetico antivibrazione
HAMMER FOR MECHANIC - carbon steel varnished finish - synthetic handle no-vibration

Impugnatura morbida bicomponente.
Soft bicomponent handle.

	Gr.	L			
0380.020	200	290	307	6	8011578913939
0380.030	300	300	466	6	8011578913960
0380.050	500	320	718	6	8011578914028
0380.080	800	320	1008	6	8011578942649
0380.100	1000	320	1186	6	8011578942663

381 MARTELLO PER FALEGNAMI - manico legno
HAMMER FOR CARPENTER - wooden handle

	Gr.	L			
0381.030	300	300	365	6	8011578914059

Zona Tecnologie Srl

382 MARTELLO PER CARPENTIERI - manico legno
HAMMER FOR CARPENTERS - wooden handle

	Gr.	L			
0382.030	300	440	530	6	8011578914110
0382.040	400	440	585	6	8011578914141

382B MANICO
HANDLE

	Gr.	L		
0382.210	300/400	440	175	8011578914233

382Z MARTELLO CARPENTIERI MANICO FIBRA CON CALAMITA
SYNTHETIC HANDLE HAMMER WITH MAGNET

	Gr.	L			
0382.925	250	500	653	4	8011578934248
0382.930	300	500	683	4	8011578934262
0382.940	400	500	766	4	8011578934286

383 MAZZETTA PER MURATORE - manico legno
HAMMER FOR MASON - wooden handle

	Gr.	L			
0383.080	800	260	954	2	8011578914264
0383.100	1000	260	1128	2	8011578914271
0383.120	1200	260	1320	2	8011578973100
0383.200	2000	260	2150	2	8011578973124

383Z MAZZETTA MURATORE MANICO FIBRA ANTISFILAMENTO
MALLET FOR MASON SYNTHETIC SELF LOOKING HANDLE

	Gr.	L			
0383.908	800	265	1034	2	8011578934309
0383.910	1000	280	1198	2	8011578934323
0383.912	1250	280	1420	2	8011578934347

Zoro Tecnologie s.r.l.

384 MARTELLO MURATORE - manico legno
HAMMER FOR MASON - wooden handle

	Gr.			
0384.040	400	500	2	8011578970383

385 MARTELLINA MALAPEGGIO - manico legno
HAMMER FOR MASON - wooden handle

	Gr.			
0385.040	400	500	2	8011578966027

385B MARTELLO CALDERAIO - manico legno
BALL PEIN HAMMER - wooden handle

	Gr.			
0385.903	300	380	2	8011578966041
0385.905	500	588	2	8011578966065
0385.908	800	990	2	8011578966089
0385.910	1000	1100	2	8011578966102

386 MARTELLO PER OROLOGIAIO - finitura cromata - manico legno
HAMMER FOR WATCHMAKERS - chrome plated fin. - wooden handle

	Gr.	L			
0386.010	35	230	52	6	8011578914295

Zorzo Tecnologie Srl

387 MARTELLO PER TAPPEZZIERE CON PENNA LEVACHIODO - finitura cromata - manico legno
HAMMER FOR UPHOLSTERER-NAIL PULLER - chrome plated finish - wooden handle

	Gr.	L			
0387.010	85	310	216	6	8011578914325

387C MARTELLO PER TAPPEZZIERE CON PENNA LEVACHIODO - CALAMITATO - manico legno
HAMMER FOR UPHOLSTERER-NAIL PULLER - WITH MAGNET - wooden handle

	Gr.	L			
0387.310	85	310	202	6	8011578914356

388 MARTELLO PER TAPPEZZIERE CON PENNA PIANA - finitura cromata - manico legno
HAMMER FOR UPHOLSTERER-FLAT - chrome plated finish - wooden handle

	Gr.	L			
0388.010	150	350	170	6	8011578914387

388A MANICO
HANDLE

	Gr.	L		
0388.110	350	350	50	8011578914417

388C MARTELLO PER TAPPEZZIERI CON PENNA PIANA - CALAMITATO - manico legno
HAMMER FOR UPHOLSTERER-FLAT - MAGNETIC - wooden handle

	Gr.	L			
0388.310	150	350	186	6	8011578914448

390 ESPOSITORE 18 MARTELLI
DISPLAY STAND 18 HAMMERS

Contenuto-content:

0380.020	200	Nr. 2	0382.930	300	Nr. 2
0380.030	300	Nr. 2	0383.908	800	Nr. 2
0380.050	500	Nr. 2	0383.910	1000	Nr. 2
0380.080	800	Nr. 1	0383.912	1250	Nr. 2
0380.100	1000	Nr. 1			
0382.925	250	Nr. 2			

	L		
0390.010	500 x 500 x 400	19100	8011578947446
0390.210	vuoto - empty	3300	8011578948740

Zo Zo Tecnologie Srl

402 TAGLIABULLONI - acciaio speciale alta resistenza al taglio - finitura verniciata - impugnatura isolata
BOLT CUTTERS - special steel high cut resistant - varnished finish - insulated handle

0402.035	**350**	5	60 x 7	897	**1**	8011578960582
0402.045	**450**	6	69 x 8	1560	**1**	8011578960605
0402.060	**600**	8	84 x 9,6	2650	**1**	8011578960629
0402.075	**750**	10	96 x 11	3900	**1**	8011578960643
0402.090	**900**	12	108 x 13	5650	**1**	8011578960667

403 LAME RICAMBIO TAGLIABULLONI - acciaio speciale alta resistenza al taglio
SPARE HEADS FOR BOLT CUTTERS - special steel-high cut resistant

0403.035	**350**	5	60 x 7	344	**1**	8011578914622
0403.045	**450**	6	69 x 8	530	**1**	8011578914653
0403.060	**600**	8	84 x 9,6	910	**1**	8011578914684
0403.075	**750**	10	96 x 11	1310	**1**	8011578914714
0403.090	**900**	12	108 x 13	1960	**1**	8011578914745

404 MINI TAGLIABULLONI - acciaio speciale alta resistenza al taglio - finitura verniciata - impugnatura plasticata
BOLT CUTTERS-SMALL - special steel high cut resistant - varnished finish - plastic handle

0404.020	**200**	4	38 x 4,5	304	**6**	8011578914776

404.900 ESPOSITORE IN CARTONE 18 MINI TAGLIABULLONI
CARTON DESK DISPLAY 18 MINI BOLT CUTTERS

Contenuto-content:
0404.020 Nr. 18

0404.900	260 x 260 x 260	6300	8011578947460

405 TRONCHESE TAGLIAFUNI PER FUNI ACCIAIO
WIRE ROPE CUTTER

0405.030	**600**	12	2500	**1**	8011578960681
0405.035	**900**	14	5600	**1**	8011578960704

407 TRONCHESE TAGLIACAVI PER FUNI ACCIAIO
WIRE ROPE CUTTER

0407.010	**190**	6	338	**6**	8011578943868

Zorzo Tecnologie SRL

408 TRONCHESE TAGLIENTE FRONTALE - acciaio chrom-vanadium finitura cromata - impugnatura isolata
END CUTTING NIPPERS - chrom-vanadium steel chrome plated finish- insulated handle

DIN 5748

	L			
0408.016	160	22	240	6	8011578914837

409 TRONCHESE TAGLIO DIAGONALE GRANDE EFFETTO - acciaio chrom-vanadium finitura cromata - impugnatura isolata
HEAVY DUTY DIAGONAL CUTTING NIPPERS - chrom-vanadium steel chrome plated finish - insulated handle

DIN ISO 5749

	L			
0409.018	180	20	272	6	8011578914868

410 TRONCHESE TAGLIO DIAGONALE A LEVA ALTA - INDUSTRIA - acciaio chrom-vanadium EXTRA finitura lucida
HIGH LEVERAGE CUTTER WITH DIAGONAL CUTTING - INDUSTRIAL- chrom-vanadium EXTRA steel polish finish

distanza ridotta della cerniere - riduce lo sforzo del 45%
reduced distance of join - less effort of 45%

Impugnatura isolata morbida bicomponente
Insulated bicomponent soft handle

Capacità taglio ø 4 mm ferro - ø 1,6 acciaio armonico
Cut capacity ø 4 mm iron - ø 1,6 piano steel
Tagliente - Cut 58-63° HRC
Pinza - Plier 43-48° HRC

DIN ISO 5749

	L			
0410.016	160	22	222	6	8011578967000

412Z TRONCHESE TAGLIO DIAGONALE - acciaio chrom-vanadium finitura cromata
CUTTER WITH DIAGONAL CUTTING - chrom-vanadium steel chrome plated finish

GOMMOGRIP MUNDIAL **Impugnatura isolata morbida bicomponente in gomma-pvc**
Insulated bicomponent soft handle in rubber-pvc

DIN ISO 5749

	L			
0412.916	160	20	230	6	8011578915018

Zorzo tecnologie srl

414 TRONCHESE TAGLIO INCLINATO - acciaio chrom-vanadium finitura lucida - impugnatura plasticata

CUTTER WITH OBLIQUE CUTTING - chrom-vanadium polished finish steel - plastic handle

0414.015	150	20	150	6	8011578915049

415 TRONCHESE TAGLIO INCLINATO PER MATERIALE PLASTICO - FILO RASO - acciaio chrom-vanadium finitura lucida

DIAGONAL CUTTER FOR PLASTIC- FLUSH CUTTING EDGE- chrom-vanadium polished finish steel

0415.016	160	142	6	8011578942069

416 TRONCHESE TAGLIO OBLIQUO PER MATERIALE PLASTICO - FILO RASO - acciaio chrom-vanadium finitura lucida

CUTTER WITH OBLIQUE CUTTING FOR PLASTIC- FLUSH CUTTING EDGE - chrom-vanadium polished finish steel

0416.010	150	20	132	6	8011578967024

Zorzo Tecnologie Srl

417 TENAGLIE PER CEMENTISTI - acciaio finitura verniciata - impugnatura plasticata
TOWER PINCERS - steel varnished finish - plastic handle

DIN ISO 9242

	L				
0417.020	**200**	22	206	**6**	8011578915070
0417.022	**220**	23	308	**6**	8011578915100
0417.025	**250**	25	410	**6**	8011578915131
0417.028	**280**	25	417	**6**	8011578970789

417.900 ESPOSITORE IN CARTONE 18 TENAGLIE
CARTON DESK DISPLAY 18 PINCERS

Contenuto-content:
0417.022 Nr. 12
0417.025 Nr. 6

	L		
0417.900	260 x 260 x 260	7000	8011578947507

418 TENAGLIE PER CEMENTISTI EXTRA - acciaio chrom-vanadium
TOWER PINCERS EXTRA - chrom-vanadium steel

DIN ISO 9242

	L				
0418.022	**220**	23	316	**6**	8011578915162
0418.025	**250**	25	382	**6**	8011578915193
0418.028	**280**	25	462	**6**	8011578947521

420 TENAGLIE PER CEMENTISTI EXTRA - acciaio chrom-vanadium - impugnatura plasticata
TOWER PINCERS EXTRA - chrom-vanadium steel - plastic handle

DIN ISO 9242

	L				
0420.022	**220**	23	340	**6**	8011578915223
0420.025	**250**	25	394	**6**	8011578915254
0420.028	**280**	25	472	**6**	8011578942946

420.900 ESPOSITORE IN CARTONE 18 TENAGLIE
CARTON DESK DISPLAY 18 PINCERS

Contenuto-content:
0420.022 Nr. 12
0420.025 Nr. 6

	L		
0420.900	260 x 260 x 260	7114	8011578947545

Zorzo Tecnologie srl

423 TENAGLIE PICCOLE - acciaio chrom-vanadium finitura fosfatata - impugnatura plasticata
END CUTTING SMALL PINCERS - chrom-vanadium steel phosphated finish - plastic handle

	L				
0423.018	180	25	248	6	8011578915285

425 TENAGLIE PER FALEGNAMI - acciaio - impugnatura plasticata
PINCERS FOR CARPENTERS - steel - plastic handle

DIN ISO 9243

	L				
0425.018	180	23	282	6	8011578915315
0425.020	200	25	398	6	8011578915346

430 PINZA CALZOLAI CON MARTELLO
SHOEMAKERS PLIERS WITH HAMMER

	L			
0430.010	200	356	6	8011578934385

431 PINZA CALZOLAI RETTA
SHOEMAKERS PLIERS - STRAIGHT

	L			
0431.010	200	396	6	8011578934408

432 PINZA CALZOLAI CURVA
SHOEMAKERS PLIERS - BENT

	L			
0432.010	200	403	6	8011578934422

Zero Tecnologie Srl

433 PINZA PER RETI AUTOMATICA CON CARICATORE - tipo professionale - posatori
FENCE PLIERS AUTOMATIC WITH LOADER - professional type - installer

	L					
0433.016	16-18	foro-hole Ø 3÷8	296	**1**	8011578972042	new
0433.020	20	foro-hole Ø 5÷11	300	**1**	8011578972066	new

433. PINZA PER RETI AUTOMATICA CON CARICATORE + PUNTI - tipo professionale - posatori
FENCE PLIERS AUTOMATIC WITH LOADER + STAPLES - professional type - installer

con punti ZINCATI / with ZINC staples:

	L					
0433.816	16-18	1000 punti / staples	910	**1**	8011578972042	new
0433.820	20	960 punti / staples	1050	**1**	8011578972066	new

con punti VERDI / with GREEN staples:

	L					
0433.916	16-18	1000 punti / staples	910	**1**	8011578972202	new
0433.920	20	960 punti / staples	1050	**1**	8011578972226	new

433.1 PUNTI ZINCATI in stecca - tipo professionale
STAPLES ZINC - professional type

	L				
0433.116	16-18	foro-hole Ø 3÷8	610	**1000**	8011578972080
0433.120	20	foro-hole Ø 5÷11	740	**960**	8011578972103

433.2 PUNTI VERDI in stecca
STAPLES GREEN - professional type

	L				
0433.216	16-18	foro-hole Ø 3÷8	610	**1000**	8011578972127
0433.220	20	foro-hole Ø 5÷11	740	**960**	8011578972141

434 PINZA PER RETI AUTOMATICA CON CARICATORE - tipo standard
FENCE PLIERS AUTOMATIC WITH LOADER - standard type

	L					
0434.016	16	foro-hole Ø 3÷8	290	**1**	8011578972240	new
0434.020	20	foro-hole Ø 5÷11	300	**1**	8011578972264	new

434. PINZA PER RETI AUTOMATICA CON CARICATORE + PUNTI - tipo standard
FENCE PLIERS AUTOMATIC WITH LOADER + STAPLES - standard type

con punti ZINCATI / with ZINC staples:

	L					
0434.816	16	1000 punti/staples	590	**1**	8011578972363	new
0434.820	20	1000 punti/staples	1080	**1**	8011578972387	new

con punti VERDI / with GREEN staples:

	L					
0434.916	16	1000 punti/staples	590	**1**	8011578972400	new
0434.920	20	1000 punti/staples	1080	**1**	8011578972424	new

434.1 PUNTI ZINCATI in stecca - tipo standard
STAPLES ZINC - standard type

	L				
0434.116	16	foro-hole Ø 3÷8	300	**1000**	8011578972288
0434.120	20	foro-hole Ø 5÷11	780	**1000**	8011578972301

434.2 PUNTI VERDI in stecca - tipo standard
STAPLES GREEN - standard type

	L				
0434.216	16	foro-hole Ø 3÷8	300	**1000**	8011578972325
0434.220	20	foro-hole Ø 5÷11	780	**1000**	8011578972349

Zoro Tecnologie Srl

435 PINZA CHIUSURA GANCI RETI TIPO PICCOLO - finitura verniciata - impugnatura plasticata
PLIER FOR CLOSING HOOKS FOR NETS - SMALL - varnished finish - plastic handle

		L			
0435.010	foro-hole Ø 6,3	210	250	**6**	8011578915407

435. PINZA CHIUSURA GANCI RETI TIPO PICCOLO + 1 KG. GANCI
PLIER FOR CLOSING HOOKS FOR NETS - SMALL + 1 KG. HOOKS

		L			
0435.015	foro-hole Ø 6,3	210	1260	**1**	8011578968007

435... GANCI PER RETI - piccoli - finitura zincata
HOOKS FOR NETS - small - zinc finish

mm. 5 x 15 spessore - thickness 0,90

0435.110	ART. 435/A	Kg. 1	**1**	8011578435103
0435.210	ART. 435/B	Kg. 5	**1**	8011578435127
0435.310	ART. 435/C	Kg. 25	**1**	8011578435158

435X GANCI PER RETI - piccoli - acciaio INOX
HOOKS FOR NETS - small - STAINLESS steel

mm. 5 x 15 spessore - thickness 0,80

0435.901	Kg. 1	**1**	8011578435189
0435.905	Kg. 5	**1**	8011578435219
0435.925	Kg. 25	**1**	8011578435240

436. PINZA CHIUSURA GANCI RETI TIPO GRANDE - finitura verniciata - impugnatura plasticata
PLIERS FOR CLOSING HOOKS FOR NETS - BIG - varnished finish - plastic handle

		L			
0436.010	foro-hole Ø 9,3	210	253	**6**	8011578915612

436 PINZA CHIUSURA GANCI RETI TIPO GRANDE + 1 KG. GANCI
PLIERS FOR CLOSING HOOKS FOR NETS - BIG + 1 KG. HOOKS

		L			
0436.015	foro-hole Ø 9,3	210	1263	**1**	8011578968021

436... GANCI PER RETI - grandi - finitura zincata
HOOKS FOR NETS - big - zinc finish

mm. 7 x 22 spessore - thickness 1,00

0436.110	ART. 436/A	Kg. 1	**1**	8011578436155
0436.210	ART. 436/B	Kg. 5	**1**	8011578436209
0436.310	ART. 436/C	Kg. 25	**1**	8011578436254

436X GANCI PER RETI - grandi - acciaio INOX
HOOKS FOR NETS - big - STAINLESS steel

mm. 7 x 22 spessore - thickness 0,80

0436.901	Kg. 1	**1**	8011578436308
0436.905	Kg. 5	**1**	8011578436353
0436.925	Kg. 25	**1**	8011578436407

Ferro Technologia Srl

437 PINZA CHIUSURA GANCI GABBIONI E PALI - finitura verniciata - impugnatura plasticata
PLIER FOR CLOSING HOOKS FOR GABIONS AND POST - varnished finish - plastic handle

	L			
0437.010	270	462	2	8011578968045

437A GANCI PER GABBIONI E PALI - finitura zincata
HOOKS FOR GABIONS AND POST - zinc finish

0437.110		Kg. 1	1	8011578968069

438 PINZA CHIUSURA GRAFFE - finitura verniciata - impugnatura plasticata
PLIERS FOR CLOSING CLIPS - varnished finish - plastic handle

	L			
0438.010	180	246	6	8011578915827

438... GRAFFE PER 438 - finitura zincata
CLIPS FOR 438 - zinc finish

mm. 21

0438.110	ART. 438/A	Kg. 1	1	8011578438104
0438.210	ART. 438/B	Kg. 5	1	8011578438159
0438.310	ART. 438/C	Kg. 25	1	8011578438203

439C ESPOSITORE 36 PINZE E TENAGLIE
DISPLAY STAND 36 PLIERS AND PINCERS

Contenuto-content:

0490.018	Nr. 6	0420.025	Nr. 6
0490.024	Nr. 6	0404.020	Nr. 6
0420.022	Nr. 6	0425.020	Nr. 6

	L		
0439.310	475 x 215 x 180	15600	8011578439033
0439.220	vuoto - empty	4150	8011578916008

Zorzo Tecnologie Srl

439.900

ESPOSITORE IN CARTONE 18 PINZE E TRONCHESI
CARTON DESK DISPLAY 18 PLIERS AND CUTTERS

Contenuto-content:
0440.918 Nr. 12
0412.916 Nr. 3
0463.916 Nr. 3

0439.900	260 x 260 x 260	5000	8011578947569

439.911

ESPOSITORE IN CARTONE 18 PINZE UNIVERSALI E TRONCHESI
CARTON DESK DISPLAY 18 PLIERS AND CUTTERS

- LEVA ALTA INDUSTRIA
- HIGH LEVERAGE INDUSTRIAL

Contenuto-content:
0441.018 Nr. 12
0410.016 Nr. 3
0462.016 Nr. 3

0439.911	260 x 260 x 260	5000	8011578968083

439.912

ESPOSITORE IN CARTONE 18 PINZE UNIVERSALI
CARTON DESK DISPLAY 18 PLIERS

Contenuto-content:
0456.016 Nr. 3
0456.018 Nr. 12
0456.020 Nr. 3

0439.912	260 x 260 x 260	4300	8011578947583

439ZF

ESPOSITORE 36 PINZE E TRONCHESI - finitura cromata - metallo
DISPLAY STAND 36 PLIERS AND CUTTERS - chrome plated finish - metal

GOMMOGRIP MUNDIAL **Impugnatura isolata morbida bicomponente in gomma-pvc**
Insulated bicomponent soft handle in rubber-pvc

Contenuto-content:
0412.916 160 Nr. 6
0440.916 160 Nr. 6
0440.918 180 Nr. 6
0463.916 160 Nr. 6
0466.916 160 Nr. 6
0467.916 160 Nr. 6

0439.915	475 x 215 x 180	11600	8011578439200
0439.220	vuoto - empty	4150	8011578916008

Zorzo Tecnologie

440Z

PINZA UNIVERSALE - acciaio chrom-vanadium finitura cromata
COMBINATION PLIERS - chrom-vanadium steel chrome plated finish

COMMOGRIP MUNDIAL **Impugnatura isolata morbida bicomponente in gomma-pvc**
Insulated bicomponent soft handle in rubber-pvc

DIN ISO 5746

0440.916	**160**	5,5 x 9,5	33,5	210	**6**	8011578916152
0440.918	**180**	5,8 x 10,0	36,5	264	**6**	8011578916183
0440.920	**200**	7,0 x 10,5	39,5	318	**6**	8011578916213

441

PINZA UNIVERSALE A LEVA ALTA - INDUSTRIA - acciaio chrom-vanadium EXTRA finitura lucida
HIGH LEVERAGE COMBINATION PLIERS - INDUSTRIAL - chrom-vanadium EXTRA steel polish finish

distanza ridotta della cerniere - riduce lo sforzo del 45%
reduced distance of join - less effort of 45%

Impugnatura isolata morbida bicomponente
Insulated bicomponent soft handle

Tagliente - Cut 58-63° HRC
Pinza - Plier 43-48° HRC

DIN ISO 5746

0441.018	**180**	5,8 x 10,0	41,0	285	**6**	8011578967048
0441.020	**200**	7,0 x 10,5	42,0	320	**6**	8011578970963

new

456

PINZA UNIVERSALE - acciaio chrom-vanadium finitura cromata - impugnatura plasticata
COMBINATION PLIERS - chrom-vanadium steel chrome plated finish - plastic handle

DIN ISO 574

0456.016	**160**	5,5 x 9,5	33,5	162	**6**	8011578916336
0456.018	**180**	5,8 x 10,0	36,5	218	**6**	8011578916367
0456.020	**200**	7,0 x 10,5	39,5	274	**6**	8011578916398

462

PINZA BECCHI MEZZOTONDI CON TAGLIENTE A LEVA ALTA - INDUSTRIA - acciaio chrom-vanadium EXTRA finitura lucida
HIGH LEVERAGE HALF NOSE PLIERS WITH CUTTER - INDUSTRIAL - chrom-vanadium EXTRA steel polish finish

distanza ridotta della cerniere - riduce lo sforzo del 45%
reduced distance of join - less effort of 45%

Impugnatura isolata morbida bicomponente
Insulated bicomponent soft handle

Tagliente - Cut 58-63° HRC
Pinza - Plier 43-48° HRC

0462.016	**160**	3 x 2,5	53	174	**6**	8011578968106
0462.020	**200**	3 x 2,5	77	210	**6**	80115789709873

new

Forze Tecnologiche s.r.l.

463Z

PINZA BECCHI MEZZOTONDI CON TAGLIENTE - cromata
HALF NOSE PLIERS WITH CUTTER - chrome

0463.916	**170**	3 x 2,5	61	154	**6**	8011578916725
0463.920	**200**	3 x 2,5	77	213	**6**	8011578916756

466Z

PINZA BECCHI MEZZOTONDI PIEGATI CON TAGLIENTE E GIRATUBO - acciaio chrom-vanadium finitura cromata
BENT LONG HALF NOSE PLIERS WITH CUTTER AND PIPE GRIP - chrom-vanadium steel chrome plated finish

DIN ISO 5745

0466.916	**170**	3 x 2,5	61	162	**6**	8011578916909
0466.920	**200**	3 x 2,5	77	208	**6**	8011578916930

467Z

PINZA BECCHI PIATTI RETTI - acciaio chrom-vanadium finitura cromata
FLAT STRAIGHT NOSE PLIERS - chrom-vanadium steel chrome plated finish

DIN ISO 5745

0467.916	**160**	3 x 5	49	172	**6**	8011578917050

469Z

PINZA BECCHI TONDI RETTI - acciaio chrom-vanadium finitura cromata
ROUND STRAIGHT NOSE PLIERS - chrom-vanadium steel chrome plated finish

DIN ISO 5745

0469.916	**160**	2,5	49	142	**6**	8011578917142

Zorzo Tecnologie Srl

470

PINZA SPELAFILI - acciaio chrom-vanadium finitura cromata - impugnatura isolata
WIRE STRIPPING PLIERS - chrom-vanadium steel chrome plated finish - insulated handle

0470.016	**160**	0,6 x 10	40	180	**6**	8011578917173

472

PINZA COMBINATA PER GOMMISTI - acciaio chrom-vanadium finitura cromata - impugnatura plasticata
WHEEL BALANCE WEIGHT PLIERS - chrom vanadium steel chrome plated finish - plastic handle

0472.010	240	366	**6**	8011578917203

474

PINZA AUTOBLOCCANTE GANASCE CONCAVE - acciaio chrom-vanadium finitura nichelata
LOCK-GRIP PLIERS CONCAVE JAWS - chrom-vanadium steel nickel plated finish

0474.014	140	182	**2**	8011578963385
0474.018	180	370	**2**	8011578917234
0474.025	250	610	**2**	8011578917265

476

PINZA AUTOBLOCCANTE PER SALDATORI - acciaio chrom-vanadium finitura nichelata
LOCK-GRIP PLIERS FOR WELDER - chrom-vanadium steel nickel plated finish

0476.010	270	804	**2**	8011578917326

Zorzo Tecnologie srl

478 PINZA AUTOBLOCCANTE A MORSETTO - acciaio chrom-vanadium finitura nichelata
CLAMP LOCK-GRIP PLIERS - chrom-vanadium steel nickel plated finish

0478.010	280	802	2	8011578917357

478Z PINZA AUTOBLOCCANTE A MORSETTO CON BASCULANTI - acciaio chrom-vanadium finitura nichelata
CLAMP LOCK-GRIP PLIER WITH SWIVEL PAD - chrom-vanadium steel nickel plated finish

0478.910	280	985	2	8011578963446

479 PINZA AUTOBLOCCANTE - ganasce lunghe
LOCK-GRIP PLIERS - long jaws

0479.016	160	174	2	8011578934446
0479.020	220	180	2	8011578934460

Zorzo Technologie Srl

480 PINZA AUTOBLOCCANTE A MORSETTO - lunghe
CLAMP LOCK-GRIP PLIERS - long

0480.010	460	1380	8011578973148	new

482 PINZA AUTOBLOCCANTE GANASCE PIATTE
CLAMP LOCK-GRIP PLIERS SHEET CLAMP

0482.010	200	522	8011578973162	new

483 PINZA AUTOBLOCCANTE A CATENA APERTURA DIAMETRO mm 150
CLAMP LOCK-GRIP PLIERS CHAIN CLAMP mm 150

0483.010	250	768	8011578973186	new

Zorro Tecnologie Srl

490 PINZA REGOLABILE CERNIERA CHIUSA - acciaio chrom-vanadium finitura verniciata - impugnatura plasticata
WATERPUMP JOINT BOX PLIERS - chrom-vanadium steel varnished finish - plastic handle

DIN ISO 8976

	L			
0490.018	180	175	**6**	8011578938680
0490.024	240	300	**6**	8011578917388
0490.030	300	434	**6**	8011578917418

490.900 ESPOSITORE IN CARTONE 18 PINZE
CARTON DESK DISPLAY 18 PLIERS

Contenuto-content:
0490.018 Nr. 3
0490.024 Nr. 12
0490.030 Nr. 3

	L		
0490.900	260 x 260 x 260	6200	8011578947606

491 PINZA REGOLABILE CERNIERA CHIUSA A PULSANTE - acciaio chrom-vanadium finitura verniciata
WATERPUMP BOX JOINT PLIER WITH PUSH BUTTON - chrom-vanadium steel varnished finish

impugnatura plasticata
plastic handle

pulsante
push button

DIN ISO 8976

	L			
0491.024	240	330	**6**	8011578963408
0491.030	300	560	**6**	8011578965907

491.900 ESPOSITORE IN CARTONE 18 PINZE A PULSANTE
CARTON DESK DISPLAY 18 PLIERS WITH PUSH BUTTON

Contenuto-content:
0491.024 Nr. 18

	L		
0491.900	260 x 260 x 260	6000	8011578963422

Forzo Tecnologie srl

492 PINZA REGOLABILE - Regolazione Automatica
WATERPUMP PLIERS - Automatic

si adatta automaticamente alle dimensioni da serrare con una sola mano
automatic adjustment to the dimensions to close with one hand

regolazione automatica
automatic

	L			
0492.018	180	168	**6**	8011578943783
0492.024	240	355	**6**	8011578943806
0492.030	300	560	**6**	8011578943820

492.900 ESPOSITORE 18 PINZE AUTOMANICHE
DISPLAY 18 AUTOMATIC PLIERS

Contenuto-content:
0492.018 Nr. 3
0492.024 Nr. 12
0492.030 Nr. 3

	L		
0492.900	260 x 260 x 260	7200	8011578947620

495 PINZA REGOLABILE A CREMAGLIERA - acciaio chrom-vanadium finitura cromata - impugnatura plasticata
DOUBLE GROOVE JOINT PLIERS - chrom-vanadium steel chrome plated finish - plastic handle

DIN ISO 8976

	L			
0495.024	240	380	**6**	8011578917449

500 GIRATUBO TIPO LEGGERO
PIPE WRENCH

	Ø	L			
0500.017	**1”**	175	326	**2**	8011578934606
0500.022	**1-1/2”**	225	560	**2**	8011578934620
0500.027	**2”**	275	780	**2**	8011578934644
0500.030	**2-1/2”**	300	1020	**2**	8011578934668
0500.035	**3”**	350	1060	**2**	8011578960964

501 PINZA PER DADI RUBINETTI - finitura lucida - impugnatura plasticata
NUT PLIERS - polished finish - plastic handle

	L			
0501.010	250	474	**6**	8011578917470

Zorzo Tecnologie Srl

502 GIRATUBO SVEDESE 45° - acciaio chrom-vanadium finitura verniciata
PIPE WRENCH-SWEDISH 45° - chrom-vanadium steel varnished finish

DIN 5234 B

	Ø	L			
0502.025	1/2"	250	378	2	8011578917500
0502.032	1"	320	774	2	8011578917531
0502.040	1-1/2"	400	1334	2	8011578917562
0502.054	2"	530	2400	1	8011578917593
0502.065	3"	650	4100	1	8011578934484

502S GIRATUBO SVEDESE 45° - ganasce S
PIPE WRENCH-SWEDISH 45° - S jaws

	Ø	L			
0502.725	1/2"	250	396	2	8011578934507
0502.732	1"	320	802	2	8011578934521
0502.740	1-1/2"	400	1500	2	8011578934545
0502.754	2"	530	2500	1	8011578934569
0502.765	3"	650	4200	1	8011578934583

503 GIRATUBO SVEDESE 90° - acciaio chrom-vanadium finitura verniciata
PIPE WRENCH-SWEDISH 90° - chrom-vanadium steel varnished finish

DIN 5234A

	Ø	L			
0503.030	1"	320	722	2	8011578917623
0503.041	1-1/2"	425	1254	2	8011578917654
0503.052	2"	560	2400	1	8011578917685
0503.062	3"	620	3200	1	8011578947644

504 GIRATUBO AMERICANO - acciaio chrom-vanadium finitura verniciata
PIPE WRENCH-AMERICAN - chrom-vanadium steel varnished finish

	Ø	L			
0504.020	1"	8"- 200	364	2	8011578917715
0504.025	1-1/2"	10"- 250	752	2	8011578917746
0504.030	2"	12"- 300	1006	2	8011578917777
0504.035	2"	14"- 350	1556	2	8011578917807
0504.045	2-1/2"	18"- 450	2400	1	8011578917838
0504.060	3"	24"- 600	3700	1	8011578917869
0504.090	4"	36"- 900	7850	1	8011578960445

Zorzi Tecnologie Srl

504A GIRATUBO AMERICANO - alluminio
PIPE WRENCH-AMERICAN - aluminium

	Ø	L			
0504.114	2”	14” - 350	848	1	8011578974886
0504.118	2-1/2”	18” - 450	1400	1	8011578934682
0504.124	3”	24” - 600	2400	1	8011578934705
0504.136	4”	36” - 900	4000	1	8011578934729

504S GIRATUBO STILSON - acciaio
PIPE WRENCH STILSON - steel

	Ø	L			
0504.725	1-1/2”	10"-250	485	2	8011578967109
0504.735	2”	14"- 350	974	2	8011578967123
0504.745	2-1/2”	18"- 450	1507	1	8011578967147
0504.760	3”	24"- 600	2564	1	8011578967161
0504.790	4”	36"- 900	4674	1	8011578967185

504ZF GIRATUBO A CATENA REVERSIBILE
PIPE WRENCH-CHAIN REVERSIBLE

	Ø	L			
0504.950	4”	300	783	1	8011578944209
catena di ricambio - spare chain:					
0504.953	4”	300	264	1	8011578970727

504ZT GIRATUBO A CATENA REVERSIBILE
PIPE WRENCH-CHAIN REVERSIBLE

	Ø	L			
0504.960	6”	900	9400	1	8011578967208

504ZZ GIRATUBO A NASTRO
BELT WRENCH

	Ø			
0504.990	90	414	1	8011578968120

Zorzo Tecnologie Srl

505 PINZA PER ANELLI ELASTICI ESTERNI BECCHI DIRITTI - acciaio chrom-vanadium - impugnatura plasticata
EXTERNAL LOCK RING PLIERS-STRAIGHT - chrom-vanadium steel - plastic handle

DIN 5254A

		Ø	ø			
0505.014	**140**	8 ÷ 25	1,3	102	**6**	8011578917890
0505.018	**180**	19 ÷ 60	1,8	180	**6**	8011578917920
0505.022	**220**	40 ÷ 100	2,3	258	**6**	8011578917951
0505.032	**320**	85 ÷ 200	3,2	490	**2**	8011578943462

506 PINZA PER ANELLI ELASTICI ESTERNI BECCHI PIEGATI - acciaio chrom-vanadium - impugnatura plasticata
EXTERNAL LOCK RING PLIERS-BENT - chrom-vanadium steel - plastic handle

DIN 5254B

		Ø	ø			
0506.013	**130**	8 ÷ 25	1,3	102	**6**	8011578917982
0506.017	**170**	19 ÷ 60	1,8	180	**6**	8011578918019
0506.021	**210**	40 ÷ 100	2,3	264	**6**	8011578918040
0506.031	**310**	85 ÷ 200	3,2	502	**2**	8011578947668

510 PINZA PER ANELLI ELASTICI INTERNI BECCHI DIRITTI - acciaio chrom-vanadium - impugnatura plasticata
INTERNAL LOCK RING PLIERS-STRAIGHT - chrom-vanadium steel - plastic handle

DIN 5256C

		Ø	ø			
0510.014	**140**	8 ÷ 25	1,3	100	**6**	8011578918071
0510.018	**180**	19 ÷ 60	1,8	166	**6**	8011578918101
0510.022	**220**	40 ÷ 100	2,3	262	**6**	8011578918132
0510.032	**320**	85 ÷ 200	3,2	433	**2**	8011578943486

511 PINZA PER ANELLI ELASTICI INTERNI BECCHI PIEGATI - acciaio chrom-vanadium - impugnatura plasticata
INTERNAL LOCK RING PLIERS-BENT - chrom-vanadium steel - plastic handle

DIN 5256D

		Ø	ø			
0511.013	**130**	8 ÷ 25	1,3	106	**6**	8011578918163
0511.017	**170**	19 ÷ 60	1,8	156	**6**	8011578918194
0511.021	**210**	40 ÷ 100	2,3	268	**6**	8011578918224
0511.031	**310**	85 ÷ 200	3,2	414	**2**	8011578947682

512A ESP. 36 PINZE PER ANELLI ELASTICI - metallo
DISPLAY STAND 36 LOCK RING PLIERS - metal

Contenuto-content:

0505.014	140	Nr. 6	0506.017	170	Nr. 6	0510.018	180	Nr. 6
0505.018	180	Nr. 6	0510.014	140	Nr. 6	0511.017	170	Nr. 6

	L		
0512.110	475 x 215 x 180	9500	8011578512002
0439.220	vuoto - empty	4150	8011578916008

512.900 ESP. IN CARTONE 18 PINZE ANELLI
CARTON DESK DIS. 18 PLIERS CIRCLIP

Contenuto-content:
0505.018 Nr. 6
0506.017 Nr. 3
0510.018 Nr. 6
0511.017 Nr. 3

	L		
0512.900	260 x 260 x 260	3800	8011578947705

Zorzi Tecnologie Srl

518.010

PINZA LUNGHISSIMA - RETTA - finitura lucida - impugnatura plasticata
LONG PLIERS - STRAIGHT - polish finish - plastic handle

0518.010	280	3 x 3.5	85	300	2	8011578971168

new

518.020

PINZA LUNGHISSIMA - CURVA - finitura lucida - impugnatura plasticata
LONG PLIERS - BEND - polish finish - plastic handle

0518.020	280	3 x 3.5	85	300	2	8011578971182

new

520

PINZA PER ELETTRONICA BECCHI PIATTI - acciaio chrom-vanadium finitura lucida
ELECTRONIC PLIERS-FLAT NOSE - chrom-vanadium polished finish steel

COMMOGRIP MUNDIAL
Impugnatura isolata morbida bicomponente in gomma-pvc
Insulated bicomponent soft handle in rubber-pvc

0520.010	120	66	6	8011578918552

522

PINZA PER ELETTRONICA BECCHI TONDI
ELECTRONIC PLIERS-ROUND NOSE

0522.010	120	70	6	8011578918583

524

PINZA PER ELETTRONICA BECCHI MEZZOTONDI PIEGATI
ELECTRONIC PLIERS-BENT HALF ROUND NOSE

0524.010	120	66	6	8011578918613

Zorzo Tecnologie Srl

525 PINZA PER ELETTRONICA BECCHI MEZZOTONDI LUNGHI
ELECTRONIC PLIERS-LONG HALF ROUND NOSE

	L			
0525.010	150	78	6	8011578918644

526 TRONCHESE TAGLIO DIAGONALE PER ELETTRONICA
ELECTRONIC DIAGONAL CUTTER

	L			
0526.010	115	72	6	8011578918675

527 TRONCHESE TAGLIO FRONTALE PER ELETTRONICA
ELECTRONIC FRONT CUTTER

	L			
0527.010	115	70	6	8011578918705

528 PINZA UNIVERSALE PER ELETTRONICA BECCHI MEZZOTONDI CON TAGLIENTE
ELECTRONIC COMBINATION PLIERS-HALF ROUND NOSE WITH CUTTER

	L			
0528.010	120	78	6	8011578918736

529.900 ESPOSITORE IN CARTONE 18 PINZE ELETTRONICA
CARTON DESK DISPLAY 18 PLIERS ELECTRONIC

Contenuto-content:

0520.010	Nr. 2	0526.010	Nr. 6
0522.010	Nr. 2	0527.010	Nr. 2
0524.010	Nr. 2	0528.010	Nr. 2
0525.010	Nr. 2		

	L		
0529.900	260 x 260 x 260	1980	8011578947729

Zorro Tecnologie Srl

533
TRONCHESE PER ELETTRONICA TESTA ARROTONDATA - PROFESSIONALE - acciaio chrom-vanadium finitura lucida
ELECTRONIC DIAGONAL CUTTER ROUND TIP - PROFESSIONAL - chrom-vanadium polished finish steel

0533.010	125	80	6	8011578967062

534
TRONCHESE ELETTRONICA TESTE APPUNTITE - PROFESSIONALE - acciaio chrom-vanadium finitura lucida
ELECTRONIC DIAGONAL CUTTER STRAIGHT TIP - PROFESSIONAL - chrom-vanadium polished finish steel

0534.010	125	68	6	8011578967086

532A
PINZETTA PLASTICATA - punte arrotondate rette
TWEEZERS WITH PLAST. HANDLE - str. round tips

0532.110	160	30	6	8011578918828

532B
PINZETTA PLASTICATA - punte arrot. curve
TWEEZERS WITH PLAST. HANDLE - bent round tips

0532.210	155	32	6	8011578918859

540A
PINZETTA - punte arrotondate rette - fin. nic.
TWEEZERS - str. round tips - nick. plat. fin.

0540.110	150	24	6	8011578918972

540B
PINZETTA - punte arrotondate curve - fin. nic.
TWEEZERS - bent round tips - nic. pl. fin.

0540.210	150	28	6	8011578919009

541B
PINZETTA AUTOBLOCCANTE - punte curve
TWEEZERS SELF-LOCKING - bent tips

0541.210	165	30	6	8011578919061

558
PUNTA A TRACCIARE
SCRIBER

0558.010	150	40	12	8011578919245

Zorzi Tecnologie Srl

544 SERIE 3 PINZETTE PLASTICATE
SET 3 TWEEZERS WITH PLAST. HANDLE

Contenuto-content:
0532.110
0532.210
0541.210

0544.010	90	1	8011578974848

new

544 SERIE 2 PINZETTE
SET 2 TWEEZERS

Contenuto-content:
0540.110
0540.210

0544.020	56	1	8011578974862

new

552 PINZA FUSTELLATRICE
PUNCH PLIER

Diametro fustelle - punch diameter:
mm 2-2,5-3-3,5-4-5

	L			
0552.010	220	290	2	8011578965723

553 PINZA FUSTELLATRICE DOPPIA LEVA
DOUBLE LEVER PUNCH PLIER

Diametro fustelle - punch diameter:
mm 2-2,5-3-3,5-4-5

	L			
0553.010	240	380	2	8011578965747

Lorzo Tecnologie srl

555.010

PINZA PUNZONATRICE PER ASSEMBLAGGIO MONTANTI frontale - CARTONGESSO
PLIERS HOLE PUNCH front - DRYWALL

capacità punzonatura - punch capacity mm 0,8 + mm 0,8

0555.010	315	660	2	8011578971205	new

555.020

PINZA PUNZONATRICE PER ASSEMBLAGGIO MONTANTI laterale - CARTONGESSO
PLIERS HOLE PUNCH - DRYWALL

capacità punzonatura - punch capacity mm 0,8 + mm 0,8

0555.020	340	880	2	8011578971229	new

555.030

PINZA PUNZONATRICE PER ASSEMBLAGGIO DOPPIA LEVA (UNA SOLA MANO) - CARTONGESSO
PLIERS HOLE PUNCH - DRYWALL

capacità punzonatura - punch capacity mm 0,8 + mm 0,8

0555.030	240	480	2	8011578971243	new

555.040

PINZA FORATRICE FORO RETTANGOLARE MONTANTI - CARTONGESSO
PLIERS HOLE SLOT - DRYWALL

0555.040	240	15 x 4	477	2	8011578971267	new

555.050

PINZA PIEGATRICE LAMIERA PIATTA larghezza mm 80 x 30 DOPPIA LEVA
PLIERS BENDING FOR SHEETS mm 80 x 30

0555.050	230	80 x 30	600	2	8011578971281	new

555.060

PINZA STRINGITUBO LAMIERA 5 DENTI DOPPIA LEVA
PLIERS 5 BLADES CRIMPER

0555.060	240	440	2	8011578971304	new

Zorro Tecnologia Srl

559 CESOIA TIPO ITALIA - acciaio finitura lucida - impugnatura plasticata
ITALIAN PATTERN TIN SNIP - polished finish steel - plastic handle

	L			
0559.022	220	368	2	8011578919276
0559.024	240	480	2	8011578919306
0559.026	260	500	2	8011578919337
0559.030	300	796	2	8011578919368

560 CESOIA TIPO AMERICA - acciaio finitura lucida - impugnatura plasticata
AMERICAN PATTERN TIN SNIP - polished finish steel - plastic handle

	L			
0560.020	200	286	2	8011578919399
0560.025	250	456	2	8011578919429
0560.030	300	728	2	8011578919450

561 CESOIA DOPPIA LEVA TAGLIO DESTRO - PROFESSIONALE
LEVER TIN SNIP - RIGHT CUT - PROFESSIONAL

taglio lamiera - metal sheet cut mm. 1,8
taglio lamiera inox - stainless steel sheet cut mm. 1,2

	L			
0561.010	250	480	2	8011578944063

562 CESOIA DOPPIA LEVA TAGLIO SINISTRO - PROFESSIONALE
LEVER TIN SNIP - LEFT CUT - PROFESSIONAL

taglio lamiera - metal sheet cut mm. 1,8
taglio lamiera inox - stainless steel sheet cut mm. 1,2

	L			
0562.010	250	475	2	8011578944087

563 CESOIA DOPPIA LEVA TAGLIO DRITTO - PROFESSIONALE
LEVER TIN SNIP - STRAIGHT CUT - PROFESSIONAL

taglio lamiera - metal sheet cut mm. 1,8
taglio lamiera inox - stainless steel sheet cut mm. 1,2

	L			
0563.010	250	470	2	8011578944100

molla di ricambio per cesoie - spare spring 561- 562 - 563 - 564 - 565 -566 - 567 - 568:

0563.210		30	2	8011578971823

Zorzo Tecnologie srl

564 CESOIA DOPPIA LEVA TAGLIO DESTRO - acciaio chrom-vanadium - impugnatura isolata
LEVER TIN SNIP - RIGHT CUT - chrom-vanadium steel - insulated handle

taglio lamiera - metal sheet cut mm. 1,5
taglio lamiera inox - stainless steel sheet cut mm. 1,0

0564.010	250	360	2	8011578919481

565 CESOIA DOPPIA LEVA TAGLIO SINISTRO - acciaio chrom-vanadium - impugnatura isolata
LEVER TIN SNIP - LEFT CUT - chrom-vanadium steel - insulated handle

taglio lamiera - metal sheet cut mm. 1,5
taglio lamiera inox - stainless steel sheet cut mm. 1,0

0565.010	250	352	2	8011578919511

566 CESOIA DOPPIA LEVA TAGLIO DIRITTO - acciaio chrom-vanadium - impugnatura isolata
LEVER TIN SNIP - STRAIGHT CUT - chrom-vanadium steel - insulated handle

taglio lamiera - metal sheet cut mm. 1,5
taglio lamiera inox - stainless steel sheet cut mm. 1,0

0566.010	250	368	2	8011578919542

567 CESOIA DOPPIA LEVA - taglio passante - destro - professionale
LEVER TIN SNIP CUT - through cuts - right - professional

taglio lamiera - metal sheet cut mm. 1,8
taglio lamiera inox - stainless steel sheet cut mm. 1,2

0567.010	250	506	2	8011578934743

568 CESOIA DOPPIA LEVA - taglio passante - sinistro - professionale
LEVER TIN SNIP CUT - through cuts - left- professional

taglio lamiera - metal sheet cut mm. 1,8
taglio lamiera inox - stainless steel sheet cut mm. 1,2

0568.010	250	495	2	8011578934767

Zorzo Tecnologie Srl

569 CESOIA RODITORE PROFESSIONALE
NIBBLER - PROFESSIONAL

taglio lamiera - metal sheet cut mm. 1,2
taglio lamiera inox - stainless steel sheet cut mm. 1,0

	L			
0569.010	250	486	**2**	8011578934781
0569.205	lama-blade	50	**1**	8011578971144
0569.210	molla-spring	30	**1**	8011578971847

570 COLTELLO PER ELETTRICISTI
KNIFE FOR ELECTRICIANS

	L			
0570.010	80	78	**12**	8011578919573

572 RIVETTATRICE PROFESSIONALE
RIVETER - PROFESSIONAL

	L			
0572.010	260	555	**2**	8011578947743

Lorzo Tecnologie Srl

574.1 LIMA PIATTA PARALLELA - taglio mezzo dolce
FILE - FLAT - cut second

	L				
0574.080	150-6"	180	2	8011578973209	new
0574.090	200-10"	200	2	8011578963804	
0574.100	250-12"	330	2	8011578940027	

574.2 LIMA MEZZO TONDA - taglio mezzo dolce
FILE - HALF ROUND - cut second

	L				
0574.180	150-6"	180	2	8011578973223	new
0574.190	200-10"	210	2	8011578963828	
0574.200	250-12"	343	2	8011578940041	

574.3 LIMA TONDA - taglio mezzo dolce
FILE - ROUND - cut second

	L	Ø				
0574.280	150-6"	mm 8	180	2	8011578973247	new
0574.290	200-10"	mm 8	126	2	8011578963842	
0574.300	250-12"	mm 9	226	2	8011578940065	

574.4 LIMA TRIANGOLARE - taglio mezzo dolce
FILE - TRIANGULAR - cut second

	L				
0574.380	150-6"	180	2	8011578973261	new
0574.390	200-10"	198	2	8011578963866	
0574.400	250-12"	306	2	8011578940881	

574.5 LIMA QUADRA - taglio mezzo dolce
FILE - SQUARE - cut second

	L				
0574.480	150-6"	140	2	8011578973285	new
0574.490	200-10"	140	2	8011578963880	
0574.500	250-12"	238	2	8011578940904	

Zorzo Tecnologie Srl

574.8 RASPA PER LEGNO MEZZO TONDA - taglio mezzo dolce
RASP FOR WOOD - HALF ROUND - cut second

	L			
0574.780	150-6"	180	2	8011578973308
0574.790	200-10"	196	2	8011578963903
0574.800	250-12"	356	2	8011578940928

new

574.990 SERIE 4 LIME
SET 4 FILES

Contenuto-content:

0574.090	200	0574.290	200	0574.190	200	0574.390	200

0574.990	800	1	8011578963927

575... LIMA PER CATENE MOTOSEGHE
FILE FOR CHAIN SAW

	L			
0575.040	4.0 x 200	110	2	8011578971328
0575.080	4.8 x 200	115	2	8011578971342

new
new

576 SCALPELLO PER LEGNO - acciaio chrom-vanadium finitura lucida - impugnatura legno
WOOD CHISEL - chrom-vanadium steel polished finish - wooden handle

	mm	L			
0576.060	6	150	110	6	8011578919603
0576.080	8	150	110	6	8011578919634
0576.100	10	150	135	6	8011578919665
0576.120	12	150	140	6	8011578919696
0576.140	14	150	144	6	8011578919726
0576.160	16	150	152	6	8011578919757
0576.180	18	155	158	6	8011578919788
0576.200	20	155	180	6	8011578919818
0576.220	22	155	174	6	8011578919849
0576.250	25	155	186	6	8011578919870
0576.300	30	155	236	6	8011578919900

577 SERIE 4 SCALPELLI - manico legno
SET 4 CHISELS - wooden handle

Contenuto-content:

0576.080	8	0576.140	14
0576.100	10	0576.180	18

	L		
0577.010	320 x 220 x 40	730	8011578577001

Zorzo Tecnologie Srl

580 SCALPELLO PER LEGNO - acciaio chrom-vanadium finitura lucida - impugnatura acetato
WOOD CHISEL - chrom-vanadium steel polished finish - acetate handle

battente acciaio
steel

	mm	L			
0580.060	**6**	150	168	**6**	8011578919962
0580.080	**8**	150	180	**6**	8011578919993
0580.100	**10**	150	182	**6**	8011578960568
0580.120	**12**	150	190	**6**	8011578920050
0580.140	**14**	150	200	**6**	8011578920081
0580.160	**16**	150	202	**6**	8011578920111
0580.180	**18**	155	220	**6**	8011578920142
0580.200	**20**	155	220	**6**	8011578920173
0580.220	**22**	155	230	**6**	8011578920203
0580.250	**25**	155	236	**6**	8011578920234
0580.300	**30**	155	260	**6**	8011578920265

581 SERIE 4 SCALPELLI - manico plastica
SET 4 CHISELS - plastic handle

Contenuto-content:
0580.080 8
0580.100 10
0580.140 14
0580.180 18

	L		
0581.010	320 x 220 x 40	935	8011578581008

581A ESPOSITORE 47 SCALPELLI MANICO PLASTICA
DISPLAY STAND 47 CHISELS WITH PLASTIC HANDLE

Contenuto-content:

0580.060	6	Nr. 5	0580.160	16	Nr. 5
0580.080	8	Nr. 5	0580.180	18	Nr. 5
0580.100	10	Nr. 5	0580.200	20	Nr. 4
0580.120	12	Nr. 5	0580.220	22	Nr. 4
0580.140	14	Nr. 5	0580.250	25	Nr. 4

	L		
0581.110	410 x 230 x 200	12900	8011578581107

582 SGORBIA PER LEGNO - acciaio chrom-vanadium finitura lucida - impugnatura legno
GOUGE WOOD CHISEL - BENT - chrom-vanadium steel polished finish - wooden handle

	mm	L			
0582.060	**6**	130	94	**6**	8011578920326
0582.080	**8**	130	92	**6**	8011578920357
0582.100	**10**	130	96	**6**	8011578920388
0582.120	**12**	130	122	**6**	8011578920418
0582.160	**16**	140	154	**6**	8011578920470
0582.200	**20**	140	182	**6**	8011578920531

Zorro Tecnologie Srl

593Z ARCHETTO PROFESSIONALE IMPUGNATURA ERGONOMICA IN ALLUMINIO E ACCIAIO - Lama HSS 12"

PROFESSIONAL STEEL AND ALUMINIUM HACKSAW ERGONOMIC HANDLE - HSS blade 12"

COMMOGRIP MUNDIAL **Impugnatura morbida bicomponente.**
Soft bicomponent handle.

	L			
0593.910	12"	700	6	8011578943622

594 ARCHETTO PROFESSIONALE IMPUGNATURA IN LEGNO - Lama HSS 12"

PROFESSIONAL HACKSAW WOOD HANDLE - HSS blade 12"

	L			
0594.010	12"	650	6	8011578921071

595 ARCHETTO IMPUGNATURA IN LEGNO - Lama HSS 12"

HACKSAW WOOD HANDLE - HSS blade 12"

	L			
0595.010	12"	374	6	8011578921101

596 ARCHETTO IMPUGNATURA ERGONOMICA - Lama HSS 12"

HACKSAW ERGONOMIC HANDLE - HSS blade 12"

	L			
0596.010	12"	410	6	8011578921132

Zoro Tecnologie srl

597 SEGHETTO PORTALAMA
MINI HACKSAW

0597.910	150	6	8011578971366	new

598 ARCHETTO PUK - finitura verniciata
PUK HACKSAW - varnished finish

0598.010	6”	92 / 12	8011578921194	new

598Z SEGHETTO MINI IMPUGNATURA IN ALLUMINIO - puk
MINI HACKSAW ALUMINIUM HANDLE - puk

0598.910	6”	118 / 6	8011578943646	new

599A LAMA PUK PER FERRO
PUK BLADE FOR IRON

prezzo per una lama
price for one blade

0599.110	6”	2 / 12	8011578921224

599B LAMA PUK PER LEGNO
PUK BLADE FOR WOOD

prezzo per una lama
price for one blade

0599.210	6”	2 / 12	8011578921255

599D LAMA HSS BIMETAL 12” TPI 24
HSS BIMETAL BLADE 12” TPI 24

prezzo per una lama
price for one blade

0599.410	12”	18 / 10	8011578921286

Zorzi Tecnologie Srl

600 SCALPELLO PER MECCANICI FORGIATO - acciaio chrom-vanadium finitura cromata
CHISEL FOR MECHANIC - FORGED - chrom-vanadium steel chrome plated finish

DIN 6453

	L			
0600.015	150 - 20	178	**6**	8011578921316
0600.020	200 - 24	324	**6**	8011578921378
0600.025	250 - 28	492	**6**	8011578921408
0600.030	300 - 34	685	**6**	8011578963484

601 SCALPELLO PER MECCANICI CON PARAMANO - acciaio chrom-vanadium finitura cromata
CHISEL FOR MECHANIC WITH HAND PROTECTION - chrom-vanadium steel chrome plated finish

DIN 6453

	L			
0601.025	250 - 28	582	**2**	8011578960988
0601.030	300 - 34	770	**2**	8011578965686

601A PARAMANO per art. 600
HAND PROTECTION - for art. 600

DIN 6453

	L				
0601.925	118	per - for 250	82	**2**	8011578961008
0601.930	120	per - for 300	84	**2**	8011578965709

609 SCALPELLO PER ELETTRICISTI - acciaio chrom-vanadium finitura cromata
CHISEL FOR ELECTRICIANS - chrom-vanadium steel chrome plated finish

	⬢	L			
0609.120	**8**	200	80	**12**	8011578921460
0609.220	**10**	200	128	**12**	8011578921491
0609.225	**10**	250	158	**12**	8011578921521
0609.230	**10**	300	192	**12**	8011578921552

610 PUNTA PER ELETTRICISTI - acciaio chrom-vanadium finitura cromata
CHISEL TIP FOR ELECTRICIANS - chrom-vanadium steel chrome plated finish

	⬢	L			
0610.225	**10**	250	154	**12**	8011578921736

Zorzo Tecnologie Srl

612 SCALPELLO PER MECCANICI - acciaio chrom-vanadium finitura cromata
CHISEL FOR MECHANIC - chrom-vanadium steel chrome-plated finish

DIN 6453

		L			
0612.013	9	125	50	12	8011578921859
0612.016	12	150	142	12	8011578921880

614 UNGHIETTA PER MECCANICI - acciaio chrom-vanadium finitura cromata
CHISEL CROSS FOR MECHANIC - chrom-vanadium steel chrome plated finish

DIN 6451

		L			
0614.013	9	125	44	12	8011578921910
0614.016	12	150	128	12	8011578921941

615 PUNZONE PER MECCANICI - acciaio chrom-vanadium finitura cromata
DRIFT PUNCH FOR MECHANIC - chrom-vanadium steel chrome plated finish

DIN 5458

	Ø		L			
0615.100	1	9	125	58	12	8011578921972
0615.200	2	9	125	66	12	8011578922009
0615.300	3	9	125	68	12	8011578922030
0615.400	4	12	150	116	12	8011578922061
0615.500	5	12	150	106	12	8011578922092
0615.600	6	12	150	126	12	8011578922122

616 PUNZONE PER CENTRI PER MECCANICI - acciaio chrom-vanadium finitura cromata
CENTRE PUNCH FOR MECHANIC - chrom-vanadium steel chrome plated finish

DIN 7250

		L			
0616.012	10	125	58	12	8011578922153
0616.015	13	150	114	12	8011578922184

616Z PUNZONE PER CENTRI AUTOMATICO - acciaio chrom-vanadium finitura cromata
AUTOMATIC CENTRE PUNCH - chrom-vanadium steel chrome plated finish

		L			
0616.910	4	125	60	6	8011578961022

617 CACCIASPINE PER MECCANICI - acciaio chrom-vanadium finitura cromata
PIN PUNCH FOR MECHANIC - chrom-vanadium steel chrome plated finish

DIN 6450

	Ø		L			
0617.020	2	30	110	40	12	8011578922214
0617.030	3	40	130	42	12	8011578922245
0617.040	4	50	145	76	12	8011578922276
0617.050	5	60	165	72	12	8011578922306
0617.060	6	65	180	138	12	8011578922337
0617.080	8	70	200	164	12	8011578922368

Fort Tecnologie Srl

617A SERIE 6 CACCIASPINE - busta
SET 6 PIN PUNCHES - envelope

Contenuto-content:

0617.020	2	0617.050	5
0617.030	3	0617.060	6
0617.040	4	0617.080	8

	L			
0617.110	590	568	**6**	8011578617189

620 SERIE 6 SCALPELLI E PUNZONI - busta
SET 6 CHISELS AND DRIFT PUNCHES - envelope

Contenuto-content:

0612.013	125	0615.200	2
0612.016	150	0615.400	4
0614.013	125	0616.012	125

	L			
0620.010	490	530	**6**	8011578620004

623 ESPOSITORE 63 PUNZONI-CACCIASPINE-SCALPELLI - metallo
DISPLAY STAND 63 DRIFT-PIN PUNCHES-CHISELS - metal

Contenuto-content:

0600.015	Nr. 3	0614.016	Nr. 3	0615.600	Nr. 3	0617.050	Nr. 3
0600.020	Nr. 3	0615.100	Nr. 3	0616.012	Nr. 3	0617.060	Nr. 3
0600.025	Nr. 3	0615.200	Nr. 3	0616.015	Nr. 3	0617.080	Nr. 3
0612.013	Nr. 3	0615.300	Nr. 3	0617.020	Nr. 3		
0612.016	Nr. 3	0615.400	Nr. 3	0617.030	Nr. 3		
0614.013	Nr. 3	0615.500	Nr. 3	0617.040	Nr. 3		

	L		
0623.010	440 x 210 x 60	14000	8011578623104
0623.210	vuoto - empty	1000	8011578960407

Zorzo Tecnologie Srl

625 SCALPELLO PER MURATORE - acciaio finitura verniciata
CHISEL FOR MASON - steel varnished finish

DIN 7254

	⬢	L			
0625.025	16	250	400	6	8011578922511
0625.030	16	300	498	6	8011578922542
0625.035	16	350	500	6	8011578922573
0625.040	16	400	666	6	8011578922603

626 PUNTA PER MURATORE - acciaio finitura verniciata
CHISEL TIP FOR MASON - steel varnished finish

DIN 7256

	⬢	L			
0626.025	16	250	386	6	8011578922634
0626.030	16	300	456	6	8011578922665
0626.035	16	350	568	6	8011578922696
0626.040	16	400	656	6	8011578922726

628 SCALPELLO PER MURATORE RIAFFILABILE - acciaio finitura verniciata
CHISEL FOR MASON - RE-SHARPABLE - steel varnished finish

	Ø	L			
0628.030	16	300	412	6	8011578922788
0628.035	16	350	502	6	8011578922818

629 PUNTA PER MURATORE RIAFFILABILE - acciaio finitura verniciata
CHISEL TIP FOR MASON - RE-SHARPABLE - steel varnished finish

	Ø	L			
0629.030	16	300	400	6	8011578922849
0629.035	16	350	472	6	8011578922870

629A IMPUGNATURA PARAMANO per art. 625 - 626 - 628 - 629
HAND PROTECTION HANDLE for art. 625 - 626 - 628 - 629

	Ø			
0629.110	16	110	6	8011578922900

Zero Tecnologie Srl

630 SCALPELLO PER MURATORE RIAFFILABILE CON PARAMANO
CHISEL FOR MASON WITH HAND PROTECTION

	Ø	L			
0630.030	**16**	300	566	**2**	8011578922931
0630.035	**16**	350	650	**2**	8011578922962

631 PUNTA PER MURATORE RIAFFILABILE CON PARAMANO - acciaio finitura cromata
CHISEL TIP FOR MASON WITH HAND PROTECTION - RE-SHARPABLE - steel chrome finish

	Ø	L			
0631.030	**16**	300	504	**2**	8011578922993
0631.035	**16**	350	586	**2**	8011578923020

633 SCALPELLO PER MURATORE TIPO LARGO - acciaio finitura verniciata
CHISEL FOR MASON - WIDE - steel varnished finish

		L			
0633.050	**50**	240	480	**6**	8011578923051
0633.070	**70**	240	506	**6**	8011578923082

635 ESPOSITORE 48 SCALPELLI E PUNTE MURATORE - metallo
DISPLAY STAND 48 CHISEL AND CHISEL TIP FOR MASON - metal

Contenuto-content:
0625.030 Nr. 6
0625.035 Nr. 6
0626.030 Nr. 6
0626.035 Nr. 6
0628.030 Nr. 6
0628.035 Nr. 6
0629.030 Nr. 6
0629.035 Nr. 6

	L		
0635.010	270 x 250 x 270	24500	8011578635008
0635.210	vuoto - empty	1000	8011578960421

Zorzo Tecnologie Srl

638 PIOMBO CILINDRICO - finitura verniciata
CYLINDRIC LEAD - varnished finish

	Gr.		
0638.010	100	12	8011578923112
0638.020	200	12	8011578923143
0638.030	300	6	8011578923174
0638.040	400	6	8011578923204
0638.050	500	6	8011578923235
0638.080	800	2	8011578923266

638A PIASTRA PER PIOMBI CILINDRICI
PLATE FOR CYLINDRIC LEAD

	per/for Gr.		
0638.110	100	6	8011578923297
0638.120	200	6	8011578923327
0638.130	300	6	8011578923358
0638.140	400	6	8011578923389
0638.150	500	6	8011578923419
0638.180	800	6	8011578923440

638Z PIOMBO + FILO + PIASTRA - finitura verniciata
LEAD + ROPE + PLATE - varnished finish

	Gr.		
0638.910	100	6	8011578968144
0638.920	200	6	8011578968168
0638.930	300	6	8011578968182
0638.940	400	6	8011578968205

640 PIOMBO A PERA - finitura verniciata
LEAD - varnished finish

	Gr.		
0640.020	200	6	8011578923471
0640.030	300	6	8011578923501
0640.040	400	6	8011578923532
0640.050	500	6	8011578923563

640A PIASTRA PER PIOMBI A PERA
PLATE FOR LEAD

	per/for Gr.		
0640.120	200	6	8011578923594
0640.130	300	6	8011578923624
0640.140	400	6	8011578923655
0640.150	500	6	8011578923662

671 APRICASSE - finitura verniciata
LEVER - varnished finish

	L			
0671.010	400	628	6	8011578923686

672 LEVACHIODO A COLLO DI CIGNO - finitura verniciata
WRECKING BARS - varnished finish

	L			
0672.010	600	1410	6	8011578923716

Zoro Tecnologie Srl

680 FORBICI PROFESSIONALI MULTIUSO - lame acciaio inox con microdentatura - impugnatura isolata
SCISSORS - PROFESSIONAL MULTI-USE - stainless steel anti-slipping blades - insulated handle

0680.010	145	80	12	8011578923747

680.900 ESPOSITORE IN CARTONE 24 FORBICI
CARTON DESK DISPLAY 24 SCISSORS

Contenuto-content:
0680.010 Nr. 24

0680.900	260 x 260 x 260	2620	8011578947767

683 FORBICI PER ELETTRICISTI - bicomponente inox
SCISSORS FOR ELECTRICIANS - bicomponent inox

0683.010	145	98	12	8011578934002

683.900 ESPOSITORE IN CARTONE 24 FORBICI
CARTON DESK DISPLAY 24 SCISSORS

Contenuto-content:
0683.010 Nr. 24

0683.900	260 x 260 x 260	2600	8011578947804

686A FORBICI ELETTRICISTI RETTE
SCISSORS FOR ELECTRICIANS - STRAIGHT

0686.110	145	90	12	8011578923921

686B FORBICI ELETTRICISTI CURVE
SCISSORS FOR ELECTRICIANS - BENT

0686.210	145	90	12	8011578923952

Zorzo Tecnologie Srl

689 FORBICI ELETTRICISTI - inox
SCISSORS FOR ELECTRICIANS - stainless

	L			
0689.010	140	67	12	8011578943882

689.900 ESPOSITORE 24 FORBICI
DISPLAY 24 SCISSORS

Contenuto-content:
0689.010 Nr. 24

	L		
0689.900	260 x 260 x 260	2300	8011578947828

700 TRONCHESE TAGLIACAVI IN RAME
CUTTER PLIERS FOR COPPER

	L			
0700.010	200	303	6	8011578943929

702 TAGLIACAVI IN RAME - acciaio speciale alta resistenza al taglio - finitura verniciata - impugnatura isolata
CUTTER PLIERS FOR COPPER CABLE - special steel high cut resistant - varnished finish - insulated handle

	L				
0702.010	450	27	982	1	8011578963460

705 MOLLA
SPRING

	L			
0705.045	45	5	12	8011578924676
0705.060	60	7	12	8011578924706
0705.065	65	7	12	8011578924737
0705.070	70	8	12	8011578924768
0705.075	75	8	12	8011578924799

Zorro Tecnologie Srl

710 PINZA UNIVERSALE ISOLATA 1000 volt VDE - acciaio chrom-vanadium finitura cromata
COMBINATION PLIERS - INSULATED 1000 volt VDE - chrom-vanadium steel chrome plated finish

60900

0710.018	180	5,8 x 10	36,5	300	6	8011578933005
0710.020	200	7 x 10,5	39,5	360	6	8011578933029

Impugnatura morbida bicomponente.
GOMMOGRIP MUNDIAL Soft bicomponent handle.

712 PINZA BECCHI MEZZOTONDI ISOLATA 1000 volt VDE - acciaio chrom-vanadium finitura cromata
HALF NOSE PLIERS - INSULATED 1000 volt VDE - chrom-vanadium steel chrome plated finish

0712.016	160	3 x 2,5	61	176	6	8011578933043
0712.020	200	3 x 2,5	77	202	6	8011578933067

714 PINZA BECCHI CURVI MEZZOTONDI ISOLATA 1000 volt VDE - acciaio chrom-vanadium finitura cromata
BENT HALF NOSE PLIERS - INSULATED 1000 volt VDE - chrom-vanadium steel chrome plated finish

0714.016	160	3 x 2,5	61	176	6	8011578933081
0714.020	200	3 x 2,5	77	202	6	8011578933104

716 TRONCHESE TAGLIO DIAGONALE ISOLATA 1000 volt VDE - acciaio chrom-vanadium finitura cromata
CUTTER DIAGONAL CUTTING - INSULATED 1000 volt VDE - chrom-vanadium steel chrome plated finish

0716.016	160	20	212	6	8011578933128

722 PINZA SPELAFILI ISOLATA 1000 volt VDE - acciaio chrom-vanadium finitura cromata
WIRE STRIPPING PLIERS - INSULATED 1000 volt VDE - chrom-vanadium steel chrome plated finish

0722.010	160	178	6	8011578933142

Forzo Tecnologie srl

728 ESPOSITORE 36 PINZE E TRONCHESI ISOLATE 1000 volt VDE
DISPALY 36 PLIERS AND CUTTERS - INSULATED 1000 volt VDE

Contenuto
0710.018 Nr. 6
0710.020 Nr. 6
0712.016 Nr. 6
0712.020 Nr. 6
0714.020 Nr. 6
0716.016 Nr. 6

0728.010	475 x 215 x 180	12600	8011578728007

730 ESPOSITORE GIRAVITI E PINZE ISOLATE 1000 volt VDE
DISPLAY INSULATED SCREWDRIVERS AND PLIERS 1000 volt VDE

DVE 60900

Contenuto-content:

0090.258	2,5 x 0,4 x 80	Nr. 9
0090.310	3,0 x 0,5 x 100	Nr. 9
0090.410	4,0 x 0,8 x 100	Nr. 8
0090.512	5,5 x 1,0 x 125	Nr. 8
0090.615	6,5 x 1,2 x 150	Nr. 7
0090.817	8,0 x 1,6 x 175	Nr. 6
0092.007	PH0 x 75	Nr. 9
0092.110	PH1 x 100	Nr. 8
0092.210	PH2 x 100	Nr. 7
0092.315	PH3 x 150	Nr. 6
0093.007	PZ0 x 75	Nr. 9
0093.110	PZ1 x 100	Nr. 8
0093.210	PZ2 x 100	Nr. 7
0710.018		Nr. 6
0710.020		Nr. 6
0712.016		Nr. 6
0712.020		Nr. 6
0714.020		Nr. 6
0716.016		Nr. 6

0730.010	475 x 215 x 600	29250	8011578730000

Zorzo Tecnologie srl

730.900 ESPOSITORE CARTONE 18 PINZE E TRONCHESI ISOLATE 1000 volt VDE
CARTON DESK DISPLAY 18 PLIERS AND CUTTER - INSULATED 1000 volt VDE

Contenuto-content:
0710.018 Nr. 12
0716.016 Nr. 3
0712.016 Nr. 3

0730.900	260 x 260 x 260	4900	8011578947842

739 SPELAFILI AUTOMATICO FRONTALE
FRONT AUTOMATIC WIRE STRIPPING PLIER

1,00÷3,20 mm Ø

0739.010	0,25 ÷ 6,0 mm²	175	210	**2**	8011578963941

740 SPELAFILI AUTOMATICO
AUTOMATIC WIRE STRIPPING PLIER

1,00÷3,20 mm Ø

0740.010	0,25 ÷ 6,0 mm²	200	210	**2**	8011578943608

741 TAGLIACAVI A CREMAGLIERA AUTOMATICO per cavi in rame-alluminio
RATCHETING CABLES CUTTER for copper-aluminium cable

0741.020	mm 36 / 300 mm²	260	670	**1**	8011578961046
0741.040	mm 60 / 500 mm²	320	858	**1**	8011578961060

741Z TAGLIACAVI A CREMAGLIERA AUTOMATICO per cavi in rame-alluminio
RATCHETING CABLES CUTTER for copper-aluminium cable

0741.920	mm 32 / 240 mm²	250	670	**1**	8011578970420
0741.940	mm 52 / 400 mm²	270	858	**1**	8011578970444

Zorzo Tecnologie Srl

750 PINZA CAPICORDA ISOLATI
CRIMPING PLIER FOR INSULATED TERMINAL

0,5-1,5 1,5-2,5 4,0-6,0 mm² - AVG 20-10

0750.010	220	578	2	8011578963965

751 PINZA CAPICORDA NON ISOLATI
CRIMPING PLIER FOR NON-INSULATED TERMINAL

0,5-1,0 1,5-2,5 4,0-10,0 mm² - AWG 20-7

0751.010	220	578	2	8011578963989

752 PINZA CAPICORDA APERTI NON ISOLATI
CRIMPING PLIER FOR NON-INSULATED TAB AND RECEPTACLES

0,5-1,0 1,5-2,5 4,0-6,0 mm² - AWG 20-10

0752.010	220	578	2	8011578964009

756 PINZA CAPICORDA DATI-TELEFONIA
MODULAR PLUG CRIMPS PLIER-TELECOM

RJ10 (4) 7,65 mm
RJ11/12 (6) 9,65 mm
RJ45 (8) 11,68 mm

0756.010	225	510	2	8011578964023

Zorzo Tecnologie srl

769 TAGLIATUBI MINI
MINI TUBE CUTTER

	Ø			
0769.015	15	259	2	8011578942724
0769.022	22	274	2	8011578942748

770 TAGLIATUBI MINI RAME E LEGHE LEGGERE mm 22 - 7/8"
MINI TUBING CUTTER mm 22 - 7/8"

	Ø			
0770.022	22 - 7/8"	99	2	8011578934804

772 TAGLIATUBI RAME E LEGHE LEGGERE mm 32 - 1 1/4"
TUBING CUTTER mm 32 - 1 1/4"

	Ø			
0772.032	32 - 1 1/4"	278	2	8011578934828

773 TAGLIATUBI TELESCOPICO 4 RULLI mm 42 - 1 5/8"
TELESCOPIC TUBING CUTTER WITH 4 ROLLERS mm 42 - 1 5/8"

- 4 RULLI
- 4 ROLLERS

	Ø			
0773.010	42	640	2	8011578967222

774 TAGLIATUBI TELESCOPICO RAME E LEGHE LEGGERE mm 32 - 1 1/4"
TELESCOPIC TUBING CUTTER mm 32 - 1 1/4"

	Ø			
0774.032	32 - 1 1/4"	272	2	8011578934842

775 LAMA per 770 - 772 - 774
SPARE BLADE for 770 - 772 - 774

	L				
0775.110	18 x 3	rame - copper	3	2	8011578934866
0775.210	18 x 3	inox - stainless steel	3	2	8011578934880

Lorzo Tecnologie Srl

776 TAGLIATUBI TELESCOPICO RAPIDO RAME E LEGHE LEGGERE mm 63 - 2 1/2"
ACTION TELESCOPIC TUBING CUTTER mm 63 - 2 1/2"

	Ø			
0776.063	63 - 2 1/2"	540	2	8011578934903

776... LAMA per 776
SPARE BLADE for 776

	L				
0776.110	18 x 3	rame - copper	3	2	8011578934927
0776.210	18 x 3	inox - stainless steel	3	2	8011578934941
0776.310	18 x 3	plastica - plastic	6	2	8011578934965

777 TAGLIATUBI TELESCOPICO RAPIDO PLASTICA mm 127 - 5"
ACTION TELESCOPIC TUBING CUTTER mm 127 - 5"

	Ø			
0777.127	127 - 5"	2000	1	8011578934989

777... LAMA per 777
SPARE BLADE for 777

	L				
0777.210	42 x 11	plastica - plastic	25	2	8011578935009

782 TAGLIATUBI PER ACCIAIO 2"
STEEL PIPE CUTTER 2"

	Ø			
0782.002	2"	2500	2	8011578935023

782... LAMA per 782
SPARE BLADE for 782

	L				
0782.110	31 x 19	acciaio - steel	25	2	8011578935047
0782.210	31 x 19	inox - stainless steel	23	2	8011578935061

Zolko Tecnologie Srl

786 TAGLIATUBI A CRICCHETTO PER PLASTICA mm 42 - 1 5/8"
PVC QUICK RELEASE PIPE CUTTER mm 42 - 1 5/8"

	Ø			
0786.042	42	767	2	8011578940126
0786.142	lama-blade	40	1	8011578971885

790 TAGLIATUBI CRICCHETTO PER PLASTICA mm 42 - 1 5/8"
PVC PIPE CUTTER mm 42 - 1 5/8"

	L			
0790.042	42 - 1 5/8"	318	2	8011578935085
0790.142	lama-blade	50	1	8011578971908

792 TAGLIATUBI PLASTICA AUTOMATICO mm 42 - 1 5/8"
AUTO PVC PIPE CUTTER mm 42 - 1 5/8"

	L				
0792.042	42 - 1 5/8"	mm 430	536	2	8011578935108

792A LAMA per 792.042
SPARE BLADE for 792.042

0792.142	74	2	8011578943028

794 TAGLIATUBI PLASTICA mm 63 - 2 1/2"
PVC PIPE CUTTER mm 63 - 2 1/2"

	L			
0794.063	63 - 2 1/2"	1074	1	8011578935122

794A LAMA per 794.063
BLADES for 794.063

0794.163	170	2	8011578943042

Zorzo Tecnologie srl

795 SBAVATUBI per interni e esterni
REAMER for internal and external

0795.010	Ø 6 ÷ 40 mm	210	2	8011578942601

796.100 CHIAVE SOTTOLAVABO REVERSIBILE
REVERSIBLE BASIN WRENCH

	L			
0796.100	350	503	2	8011578942700

796.300 CHIAVE SOTTOLAVABO RUBINETTO
BASIN WRENCH

	L			
0796.300	310	474	2	8011578935146

797 CHIAVE SOTTOLAVABO RUBINETTO TELESCOPICO
TELESCOPIC BASIN WRENCH

	L			
0797.300	290	761	2	8011578935160

798 PINZA PER SIFONI
SYPHONE PLIERS

	L			
0798.240	230	255	2	8011578935184

799 PIEGATUBI mm 6-8-10
TUBE BENDER mm 6-8-10

	L			
0799.010	275	427	1	8011578942625

Pozzo Tecnologie Srl

803 SERIE 7 MATRICI E CRICCHETTO CURVATUBI PER RAME E MULTISTRATO
SET 7 BEND FORM AND RATCHET FOR COPPER ISOLATED TUBE

per tubi - for tube
6 - 8 - 10 - 12 - 16 - 19 - 22

0803.010	6-22 mm	2000	1	8011578969684

807 UTENSILE PER COLLETTI TUBI RAME-OTTONE-ALLUMINIO
TOOL FOR FLARING TUBE COPPER-BRASS-ALUMINIUM

per tubi - for tube
3/16 - 5/8

0807.010	ø 5-16 mm	740	2	8011578967284

815 CHIAVE PER PILETTE
PLUMBERS BASIN LEVEL

0815.010	ø 42-56 mm	315	2	8011578967307

830 CHIAVE 4 APERTURE A CROCE
CROSS KEY WRENCH

0830.010		54	2	8011578967321

832 RASCHIETTO TELESCOPICO
TELESCOPIC DEBURRING TOOL

0832.010		30	2	8011578967345

833 LAMA HSS per art. 832
HSS BLADE for art. 832

prezzo per una lama
price for one blade

0833.010		3	10	8011578967369

Zorzo Tecnologie Srl

839 CHIAVE REGOLABILE PER IDRAULICA IN ALLUMINIO apertura mm 68
ADJUSTABLE WRENCH ALUMINIUM open mm 68

0839.010	200	mm 68	195	1	8011578973346

new

840 CRICCHETTO 1/2" FEMMINA
RATCHET 1/2" FEMALE

0840.010	270	526	2	8011578964047

841 CRICCHETTO + CHIAVE GRADINI
RATCHET + WRENCH STEP

mm 9,6 - 11,6 - 12,6 - 16,4 - 21,0

0841.010	654	1	8011578964061

842 CHIAVE GRADINI RADIATORE 1/2"
WRENCH STEP 1/2"

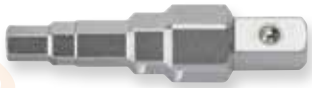

mm 9,6 - 11,6 - 12,6 - 16,4 - 21,0

0842.010	90	128	2	8011578964085

843 RACCORDO 1/2"
ADAPTER FROM 1/2"

0843.010	35	42	2	8011578964108

847 KIT RIPARAZIONE RUBINETTI
SET TOP RESEATER

mm 10 - 12 - 13 - 14 - 15 - 16

0847.010	180	1	8011578964122

Zenzo Tecnologie Srl

1020 CHIAVE A FORCHETTA - acciaio chrom-vanadium finitura cromata teste lucide

DOUBLE ENDED OPEN WRENCH - chrom-vanadium steel chrome plated finish polish heads

DIN 3110 ISO 10102

1020.067	**6-7**	122	15	17	3,6	20	**12**	8011578924850	
1020.089	**8-9**	140	20	22	4,0	33	**12**	8011578924881	
1020.090	**8-10**	157	20	24	4,4	34	**12**	8011578971922	new
1020.101	**10-11**	157	24	26	4,4	48	**12**	8011578924911	
1020.103	**10-13**	160	24	30	5,0	50	**12**	8011578973360	new
1020.123	**12-13**	172	28	30	5,0	65	**12**	8011578924942	
1020.137	**13-17**	190	30	38	5,0	58	**12**	8011578971946	new
1020.145	**14-15**	190	32	34	5,4	85	**12**	8011578924973	
1020.167	**16-17**	205	36	38	5,8	120	**12**	8011578925000	
1020.189	**18-19**	222	39	41	6,3	162	**6**	8011578925031	
1020.202	**20-22**	236	43	47	7,0	214	**6**	8011578925062	
1020.213	**21-23**	250	45	49	7,6	231	**6**	8011578925093	
1020.246	**24-26**	260	52	56	8,0	308	**6**	8011578925123	
1020.247	**24-27**	260	52	58	8,0	316	**6**	8011578925154	
1020.258	**25-28**	280	52	58	8,0	340	**6**	8011578925185	
1020.302	**30-32**	310	59	64	8,5	429	**6**	8011578925215	
1020.326	**32-36**	310	64	72	8,5	500	**2**	8011578960483	
1020.361	**36-41**	355	64	79	8,5	790	**2**	8011578942687	
1020.416	**41-46**	420	79	88	13,5	1192	**2**	8011578943523	
1020.465	**46-50**	475	88	95	15	1600	**2**	8011578943547	

1021 SERIE CHIAVI A FORCHETTA - scatola cartone

SET DOUBLE ENDED OPEN WRENCHES - box

Contenuto - content:
1020.067 6-7
1020.089 8-9
1020.101 10-11
1020.123 12-13
1020.145 14-15
1020.167 16-17

serie - set 6

	Pz.		
1021.060	**6**	404	8011578021030

Contenuto - content:
1020.067 6-7
1020.089 8-9
1020.101 10-11
1020.123 12-13
1020.145 14-15
1020.167 16-17
1020.189 18-19
1020.202 20-22

serie - set 8

	Pz.		
1021.080	**8**	770	8011578021078

Tecnologie Srl

1021 SERIE CHIAVI A FORCHETTA - scatola cartone
SET DOUBLE ENDED OPEN WRENCHES - box

serie - set 12

Contenuto - content:
1020.067 6-7
1020.089 8-9
1020.101 10-11
1020.123 12-13
1020.145 14-15
1020.167 16-17
1020.189 18-19
1020.202 20-22
1020.213 21-23
1020.247 24-27
1020.258 25-28
1020.302 30-32

	Pz.		
1021.120	**12**	2200	8011578021092

1022 SERIE CHIAVI A FORCHETTA - busta tela avvolgibile
SET DOUBLE ENDED OPEN WRENCHES - envelope canvas roller blind

serie - set 8

Contenuto - content:
1020.067 6-7
1020.089 8-9
1020.101 10-11
1020.123 12-13
1020.145 14-15
1020.167 16-17
1020.189 18-19
1020.202 20-22

	Pz.		
1022.080	**8**	830	8011578022082

serie - set 12

Contenuto - content:
1020.067 6-7
1020.089 8-9
1020.101 10-11
1020.123 12-13
1020.145 14-15
1020.167 16-17
1020.189 18-19
1020.202 20-22
1020.213 21-23
1020.247 24-27
1020.258 25-28
1020.302 30-32

	Pz.			
1022.120	**12**	2300	8011578022129	
1022.208	**8**	59	8011578968229	Busta vuota per 8 chiavi a forchetta - Empty envelope for 8 wrenches
1022.212	**12**	155	8011578968243	Busta vuota per 12 chiavi a forchetta - Empty envelope for 12 wrenches

1023 SERIE 8 CHIAVI A FORCHETTA - cartone
SET 8 DOUBLE ENDED OPEN WRENCHES - box

serie - set 8

Contenuto - content:
1020.067 6-7
1020.089 8-9
1020.101 10-11
1020.123 12-13
1020.145 14-15
1020.167 16-17
1020.189 18-19
1020.202 20-22

	Pz.		
1023.080	**8**	928	8011578023058

Forzo Tecnologie Srl

1025 CHIAVE POLIGONALE - acciaio chrom-vanadium finitura cromata teste lucide

OFFSET DOUBLE RING WRENCH - chrom-vanadium steel chrome plated finish polish heads

DIN 838 ISO 10104

1025.067	6-7	173	10,5	12,5	5-6	52	12	8011578925451
1025.089	8-9	185	13,0	15,0	5,5-6,5	58	12	8011578925482
1025.101	10-11	200	16,0	17,5	7,5-9	86	12	8011578925512
1025.123	12-13	215	19,0	21,0	8,5-9,5	112	12	8011578925543
1025.145	14-15	230	23,0	24,0	9,5-10	126	12	8011578925574
1025.167	16-17	245	25,0	26,0	10-12	184	12	8011578925604
1025.189	18-19	265	23,0	24,0	12-12,5	224	6	8011578925635
1025.202	20-22	292	31,0	34,0	13-13,5	316	6	8011578925666
1025.213	21-23	320	31,5	35,5	13-13,5	330	6	8011578925697
1025.246	24-26	330	36,5	39,0	13,5-14	422	6	8011578925727
1025.247	24-27	330	36,5	40,5	13,5-14,5	416	6	8011578925758
1025.258	25-28	340	39,0	43,0	14-16	510	6	8011578925789
1025.302	30-32	370	45,0	47,0	15-17	602	6	8011578925819
1025.364	36-41	465	54,0	60,0	18-18	1289	6	8011578969707

1026 SERIE CHIAVI POLIGONALI - scatola cartone

SET OFFSET-DOUBLE RING WRENCHES - box

Contenuto - content:
1025.067 6-7
1025.089 8-9
1025.101 10-11
1025.123 12-13
1025.145 14-15
1025.167 16-17

serie - set 6

	Pz.		
1026.060	6	666	8011578026028

Contenuto - content:
1025.067 6-7
1025.089 8-9
1025.101 10-11
1025.123 12-13
1025.145 14-15
1025.167 16-17
1025.189 18-19
1025.202 20-22

serie - set 8

	Pz.		
1026.080	8	1182	8011578026035

Contenuto - content:
1025.067 6-7
1025.089 8-9
1025.101 10-11
1025.123 12-13
1025.145 14-15
1025.167 16-17
1025.189 18-19
1025.202 20-22
1025.213 21-23
1025.247 24-27
1025.258 25-28
1025.302 30-32

serie - set 12

	Pz.		
1026.120	12	3100	8011578026073

Nord Tecnologie Srl

1030

CHIAVE COMBINATA - acciaio chrom-vanadium finitura cromata teste lucide
COMBINATION WRENCH - chrom-vanadium steel chrome plated finish polish heads

DIN 3113 ISO 7738

					Sp.			8 011578 000004	
1030.055	**5,5-5,5**	104	10,5	14,5	3,5-5,2	18	**12**	8011578942984	
1030.060	**6-6**	104	10,5	14,5	3,5-5,2	20	**12**	8011578925932	
1030.070	**7-7**	113	12	17	4-6	24	**12**	8011578925963	
1030.080	**8-8**	125	13,7	18	4-6	32	**12**	8011578925994	
1030.090	**9-9**	134	15	20	4,2-6,5	32	**12**	8011578926021	
1030.100	**10-10**	142	16	20	4,2-7	42	**12**	8011578926052	
1030.110	**11-11**	155	18	24	5-9	60	**12**	8011578926083	
1030.120	**12-12**	160	19	27	5-9	58	**12**	8011578926113	
1030.130	**13-13**	174	20	28	5-9	82	**12**	8011578926144	
1030.140	**14-14**	182	22	30	5-9	84	**12**	8011578926175	
1030.150	**15-15**	192	23	31	5,5-10	102	**12**	8011578926205	
1030.160	**16-16**	206	25	34	6-10	114	**12**	8011578926236	
1030.170	**17-17**	210	26	35	6,5-10,5	136	**12**	8011578926267	
1030.180	**18-18**	210	28	38	6,5-10,5	144	**6**	8011578926298	
1030.190	**19-19**	235	29	39	7-11	182	**6**	8011578926328	
1030.200	**20-20**	235	30	41	7-11,5	180	**6**	8011578926359	
1030.210	**21-21**	240	32	43	7,5-12,5	202	**6**	8011578926380	
1030.220	**22-22**	260	33	40	8-13	270	**6**	8011578926410	
1030.230	**23-23**	260	35	46	8-18,5	224	**6**	8011578926441	
1030.240	**24-24**	282	36	48	9-13	298	**6**	8011578926472	
1030.250	**25-25**	282	37	51	9-14	328	**6**	8011578926502	
1030.260	**26-26**	300	38	52	8,5-14,5	410	**6**	8011578926533	
1030.270	**27-27**	300	40	54	10-14	380	**6**	8011578926564	
1030.280	**28-28**	300	42	56	10-14	380	**6**	8011578926595	
1030.290	**29-29**	320	41	57	11-16	437	**6**	8011578968267	
1030.300	**30-30**	330	45	61	11-16	480	**6**	8011578926625	
1030.320	**32-32**	364	45	61	11-16	542	**6**	8011578926656	
1030.360	**36-36**	385	52	70	12-20	740	**1**	8011578935641	
1030.410	**41-41**	440	58	78	19-23	1105	**1**	8011578935665	
1030.460	**46-46**	500	67	90	16-24	1800	**1**	8011578973384	new
1030.500	**50-50**	540	74	102	18-24	2200	**1**	8011578973407	new

Zulzo Tecnologie Srl

1031

SERIE CHIAVI COMBINATE - scatola cartone
SET COMBINATION WRENCHES - box

Contenuto - content:
1030.080 8-8
1030.090 9-9
1030.100 10-10
1030.110 11-11
1030.130 13-13
1030.140 14-14
1030.170 17-17
1030.190 19-19

serie - set **8**

	Pz.		8 011578 000004
1031.080	**8**	656	8011578031015

Contenuto - content:

1030.060	6-6	1030.120	12-12
1030.070	7-7	1030.130	13-13
1030.080	8-8	1030.140	14-14
1030.090	9-9	1030.170	17-17
1030.100	10-10	1030.190	19-19
1030.110	11-11	1030.220	22-22

serie - set **12**

	Pz.		8 011578 000004
1031.120	**12**	1006	8011578031039

1031 SERIE CHIAVI COMBINATE - scatola cartone
SET COMBINATION WRENCHES - box

Contenuto - content:

1030.060	6-6	1030.120	12-12	1030.180	18-18
1030.070	7-7	1030.130	13-13	1030.190	19-19
1030.080	8-8	1030.140	14-14	1030.200	20-20
1030.090	9-9	1030.150	15-15	1030.210	21-21
1030.100	10-10	1030.160	16-16	1030.220	22-22
1030.110	11-11	1030.170	17-17		

serie - set 17

	Pz.		
1031.170	**17**	1738	8011578031053

Contenuto - content:

1030.060	6-6	1030.130	13-13	1030.200	20-20
1030.070	7-7	1030.140	14-14	1030.210	21-21
1030.080	8-8	1030.150	15-15	1030.220	22-22
1030.090	9-9	1030.160	16-16	1030.240	24-24
1030.100	10-10	1030.170	17-17	1030.270	27-27
1030.110	11-11	1030.180	18-18	1030.300	30-30
1030.120	12-12	1030.190	19-19	1030.320	32-32

serie - set 21

	Pz.		
1031.210	**21**	3600	8011578031213

Contenuto - content:

1030.060	6-6	1030.150	15-15	1030.240	24-24
1030.070	7-7	1030.160	16-16	1030.250	25-25
1030.080	8-8	1030.170	17-17	1030.260	26-26
1030.090	9-9	1030.180	18-18	1030.270	27-27
1030.100	10-10	1030.190	19-19	1030.280	28-28
1030.110	11-11	1030.200	20-20	1030.300	30-30
1030.120	12-12	1030.210	21-21	1030.320	32-32
1030.130	13-13	1030.220	22-22		
1030.140	14-14	1030.230	23-23		

serie - set 25

	Pz.		
1031.250	**25**	5000	8011578031237

1032 SERIE CHIAVI COMBINATE - busta tela avvolgibile
SET COMBINATION WRENCHES - envelope canvas roller blind

Contenuto - content:

1030.080	8-8	1030.170	17-17
1030.090	9-9	1030.190	19-19
1030.100	10-10		
1030.110	11-11		
1030.130	13-13		
1030.140	14-14		

serie - set 8

	Pz.		
1032.080	**8**	703	8011578032081

Contenuto - content:

1030.060	6-6	1030.120	12-12
1030.070	7-7	1030.130	13-13
1030.080	8-8	1030.140	14-14
1030.090	9-9	1030.170	17-17
1030.100	10-10	1030.190	19-19
1030.110	11-11	1030.220	22-22

serie - set 12

	Pz.		
1032.120	**12**	1085	8011578032128
1032.250	**25**	5010	8011578970949
1032.208	**8**	59	8011578968281
1032.212	**12**	103	8011578968304
1032.225	**25**	381	8011578971960

Busta vuota per 8 chiavi combinate - Empty envelope for 8 wrenches
Busta vuota per 12 chiavi combinate- Empty envelope for 12 wrenches
Busta vuota per 25 chiavi combinate- Empty envelope for 25 wrenches

Terzo Tecnologie srl

1033 SERIE 9 CHIAVI COMBINATE - clip in plastica compatta
SET 9 COMBINATION WRENCHES - compact plastic clip

serie - set 9

clip in plastica compatta
compact plastic clip

Contenuto - content:

1030.080	8-8	1030.140	14-14
1030.100	10-10	1030.150	15-15
1030.110	11-11	1030.170	17-17
1030.120	12-12	1030.190	19-19
1030.130	13-13		

	Pz.		
1033.909	**9**	838	8011578970581

1033 SERIE CHIAVI COMBINATE - scatola cartone
SET COMBINATION WRENCHES - box

serie - set 8

Contenuto - content:

1030.080	8-8	1030.130	13-13
1030.090	9-9	1030.140	14-14
1030.100	10-10	1030.170	17-17
1030.110	11-11	1030.190	19-19

	Pz.		
1033.080	**8**	816	8011578033095

serie - set 12

Contenuto - content:

1030.060	6-6	1030.120	12-12
1030.070	7-7	1030.130	13-13
1030.080	8-8	1030.140	14-14
1030.090	9-9	1030.170	17-17
1030.100	10-10	1030.190	19-19
1030.110	11-11	1030.220	22-22

	Pz.		
1033.120	**12**	1200	8011578033057

1035 CHIAVE COMBINATA in POLLICI - acciaio chrom-vanadium finitura cromata
COMBINATION WRENCH in INCH - chrom-vanadium steel chrome plated finish

POLLICI
INCH

		L			
1035.005	1/4"	102	18	**2**	8011578964146
1035.008	5/16"	125	26	**2**	8011578964160
1035.010	3/8"	133	30	**2**	8011578964184
1035.020	7/16"	150	50	**2**	8011578964207
1035.030	1/2"	170	76	**2**	8011578964221
1035.040	9/16"	180	80	**2**	8011578964245
1035.050	5/8"	205	114	**2**	8011578964269
1035.070	11/16"	205	130	**2**	8011578964283
1035.080	3/4"	230	164	**2**	8011578964306
1035.100	13/16"	245	200	**2**	8011578964320
1035.110	7/8"	255	234	**2**	8011578964344
1035.120	15/16"	280	302	**2**	8011578964368
1035.130	1"	285	246	**2**	8011578964382
1035.140	1.1/16"	305	404	**2**	8011578964405
1035.150	1.1/8"	315	394	**2**	8011578964429
1035.170	1.1/4"	360	598	**2**	8011578964443

Zerzo Tecnologie Srl

1035 SERIE CHIAVI COMBINATE in POLLICI - scatola cartone
SET COMBINATION WRENCHES in INCH - box

Contenuto - content:
1035.005 1035.008 1035.010 1035.020 1035.030
1035.040 1035.050 1035.070 1035.080

serie - set 9

	Pz.	
1035.909	**9**	8011578970369

Contenuto - content:
1035.005 1035.008 1035.010 1035.020 1035.030 1035.040 1035.050
1035.070 1035.080 1035.100 1035.110 1035.120 1035.130

serie - set 13

	Pz.	
1035.913	**13**	8011578964481

1035 SERIE CHIAVI COMBINATE in POLLICI - scatola cartone
SET COMBINATION WRENCHES in INCH - box

serie - set 16

Contenuto - content:
1035.005 1035.008 1035.010 1035.020 1035.030 1035.040 1035.050 1035.070
1035.080 1035.100 1035.110 1035.120 1035.130 1035.140 1035.150 1035.170

	Pz.	
1035.916	**16**	8011578964504

1038 CHIAVE COMBINATA LUNGHISSIMA - acciaio chrom-vanadium finitura cromata teste lucide
COMBINATION WRENCH EXTRA LONG - chrom-vanadium steel chrome plated finish polish heads

DIN 3113 ISO 7738

					Sp.		
1038.080	**8-8**	170	13,7	18	4-6	**2**	8011578968328
1038.100	**10-10**	190	16	20	4,2-7	**2**	8011578968342
1038.110	**11-11**	200	18	24	5-9	**2**	8011578968366
1038.120	**12-12**	215	19	27	5-9	**2**	8011578968380
1038.130	**13-13**	225	20	28	5-9	**2**	8011578968403
1038.140	**14-14**	240	22	30	5-9	**2**	8011578968427
1038.150	**15-15**	250	23	31	5,5-10	**2**	8011578968441
1038.170	**17-17**	290	26	35	6,5-10,5	**2**	8011578968465
1038.190	**19-19**	320	29	39	7-11	**2**	8011578968489

1039 SERIE CHIAVI COMBINATE LUNGHISSIME - scatola cartone
SET COMBINATION WRENCHES EXTRA LONG - box

serie - set 5

Contenuto - content:
1038.080 8-8 1038.130 13-13 1038.190 19-19
1038.100 10-10 1038.170 17-17

	Pz.	
1039.050	**5**	8011578968502

serie - set 9

Contenuto - content:
1038.080 8-8 1038.120 12-12 1038.150 15-15
1038.100 10-10 1038.130 13-13 1038.170 17-17
1038.110 11-11 1038.140 14-14 1038.190 19-19

	Pz.	
1039.090	**9**	8011578968526

Zorzo Tecnologie Srl

1039 SERIE CHIAVI COMBINATE LUNGHISSIME
SET COMBINATION WRENCHES EXTRA LONG

Contenuto - content:
1038.080 8-8 1038.130 13-13 1038.190 19-19
1038.100 10-10 1038.170 17-17

serie - set 5

	Pz.	
1039.905	5	8011578968540

1040 CHIAVE COMBINATA DOPPIA CURVA 75° (controgomito) - acciaio chrom-vanadium finitura cromata
COMBINATION WRENCH OFFSET 75° - chrom-vanadium steel chrome plated finish

DIN 3113 ISO 7738

					Sp.			
1040.080	8-8	124	13,7	18	4-6	28	6	8011578968649
1040.100	10-10	148	16	20	4,2-7	40	6	8011578968663
1040.110	11-11	157	18	24	5-9	50	6	8011578968687
1040.120	12-12	172	19	27	5-9	60	6	8011578968700
1040.130	13-13	181	20	28	5-9	80	6	8011578968724
1040.140	14-14	194	22	30	5-9	86	6	8011578968748
1040.150	15-15	210	23	31	5,5-10	110	6	8011578968762
1040.170	17-17	232	26	35	6,5-10,5	153	6	8011578968786
1040.190	19-19	258	29	39	7-11	202	6	8011578968809
1040.220	22-22	286	33	40	8-13	276	6	8011578968823
1040.240	24-24	316	36	48	9-13	351	6	8011578968847
1040.270	27-27	352	40	54	10-14	460	6	8011578968861
1040.300	30-30	389	45	61	11-16	600	6	8011578968885
1040.320	32-32	412	45	61	11-16	690	6	8011578968908

- per operare in profondità
- for operating in recess

Tipo pesante - Heavy duty:

1040.460	46-46	500	90	70	10	2400	1	8011578968564	
1040.500	50-50	540	100	75	18	2800	1	8011578968588	
1040.550	55-55	610	110	80	18	3200	1	8011578968601	
1040.600	60-60	660	120	90	18	4000	1	8011578968625	
1040.650	65-65	710	130	90	20	4700	1	8011578973421	
1040.700	70-70	810	150	110	24	6460	1	8011578970468	new
1040.750	75-75	520	150	110	26	6400	1	8011578973445	new
1040.800	80-80	870	160	120	32	8000	1	8011578973469	new
1040.850	85-85	870	160	120	32	8650	1	8011578973483	new

1041 SERIE CHIAVI COMBINATE DOPPIA CURVA 75° - scatola cartone
SET COMBINATION WRENCHES OFFSET 75° - box

Contenuto - content:
1040.080 1040.110 1040.140 1040.170
1040.100 1040.130 1.040.150 1040.190

serie - set 8

	Pz.		
1041.080	8	750	8011578968922

Contenuto - content:
1040.080 1040.110 1040.130 1040.150 1040.190 1040.240
1040.100 1040.120 1040.140 1040.170 1040.220 1040.270

serie - set 12

	Pz.		
1041.120	12	1900	8011578968946

Contenuto - content:
1040.080 1040.110 1040.130 1040.150 1040.190 1040.240 1040.300
1040.100 1040.120 1040.140 1040.170 1040.220 1040.270 1040.320

serie - set 14

	Pz.		
1041.140	14	3190	8011578968960

Mondial Tecnologie Srl

1041 SERIE CHIAVI COMBINATE DOPPIA CURVA 75°
SET COMBINATION WRENCHES OFFSET 75°

Contenuto - content:

1040.080	8- 8	1040.130	13-13	1040.190	19-19
1040.100	10-10	1040.170	17-17		

serie - set 5

	Pz.		
1041.905	5	525	8011578968984

Contenuto - content:

1040.080	8- 8	1040.110	11-11	1040.140	14-14	1040.170	17-17
1040.100	10-10	1040.130	13-13	1040.150	15-15	1040.190	19-19

serie - set 8

	Pz.		
1041.980	8	760	8011578969004

Zorro Tecnologie Srl

1041 SERIE 9 CHIAVI COMBINATE DOPPIA CURVA 75° - clip in plasrtica compatta
SET 9 COMBINATION WRENCHES OFFSET 75° - compact plastic clip

clip in plastica compatta
compact plastic clip

Contenuto - content:

1040.080	8-8	1040.140	14-14
1040.100	10-10	1040.150	15-15
1040.110	11-11	1040.170	17-17
1040.120	12-12	1040.190	19-19
1040.130	13-13		

serie - set 9

	Pz.			
1041.909	9	900	8011578970628	new

1043 SERIE 8 CHIAVI COMBINATE DOPPIA CURVA 75° - scatola cartone
SET 8 COMBINATION WRENCHES OFFSET 75° - box

Contenuto - content:

1040.080	8- 8	1040.110	11-11	1040.140	14-14	1040.170	17-17
1040.100	10-10	1040.130	13-13	1.040.150	15-15	1040.190	19-19

serie - set 8

	Pz.	
1043.080	8	8011578969028

1048 CHIAVE DOPPIA TORX
DOUBLE RING TORX WRENCH

		L			
1048.068	**E6-E8**	112	22	**2**	8011578964528
1048.102	**E10-E12**	145	38	**2**	8011578964542
1048.148	**E14-E18**	180	80	**2**	8011578964566
1048.204	**E20-E24**	220	158	**2**	8011578964580

1048 SERIE 4 CHIAVI DOPPIA TORX - scatola
SET 4 DOUBLE RING TORX WRENCHES - box

Contenuto - content:
1048.068 1048.148
1048.102 1048.204

serie - set **4**

	Pz.		
1048.904	**4**	300	8011578964603

1050 PANNELLO ESPOSITORE 158 CHIAVI forchetta - poligonali - combinate - metallo
DISPLAY 158 double ended WRENCHES - offset - combination - metal

Contenuto - content:

1020.067	6-7	Nr. 6	1025.302	30-32	Nr. 2
1020.089	8-9	Nr. 6	1030.060	6-6	Nr. 6
1020.101	10-11	Nr. 6	1030.070	7-7	Nr. 6
1020.123	12-13	Nr. 6	1030.080	8-8	Nr. 6
1020.145	14-15	Nr. 2	1030.090	9-9	Nr. 6
1020.167	16-17	Nr. 2	1030.100	10-10	Nr. 6
1020.189	18-19	Nr. 2	1030.110	11-11	Nr. 6
1020.202	20-22	Nr. 2	1030.120	12-12	Nr. 6
1020.213	21-23	Nr. 2	1030.130	13-13	Nr. 6
1020.247	24-27	Nr. 2	1030.140	14-14	Nr. 6
1020.258	25-28	Nr. 2	1030.150	15-15	Nr. 2
1020.302	30-32	Nr. 2	1030.160	16-16	Nr. 2
1025.067	6-7	Nr. 6	1030.170	17-17	Nr. 2
1025.089	8-9	Nr. 6	1030.180	18-18	Nr. 2
1025.101	10-11	Nr. 6	1030.190	19-19	Nr. 2
1025.123	12-13	Nr. 6	1030.200	20-20	Nr. 2
1025.145	14-15	Nr. 2	1030.210	21-21	Nr. 2
1025.167	16-17	Nr. 2	1030.220	22-22	Nr. 2
1025.189	18-19	Nr. 2	1030.240	24-24	Nr. 2
1025.202	20-22	Nr. 2	1030.270	27-27	Nr. 2
1025.213	21-23	Nr. 2	1030.300	30-30	Nr. 2
1025.247	24-27	Nr. 2	1030.320	32-32	Nr. 2
1025.258	25-28	Nr. 2			

	L		
1050.010	990 x 520	21200	8011578050108
1050.210	vuoto - empty	5800	8011578050207

Zorzo Tecnologie

1051 CHIAVE PER RACCORDI TUBI
FLARE NUT OPEN RING WRENCH

1051.080	**8-10**	140	41	**6**	8011578935207
1051.091	**9-11**	150	58	**6**	8011578935221
1051.101	**10-11**	150	53	**6**	8011578935245
1051.113	**11-13**	168	89	**6**	8011578935269
1051.124	**12-14**	170	103	**6**	8011578935283
1051.179	**17-19**	215	157	**6**	8011578935306
1051.192	**19-22**	220	232	**6**	8011578935320
1051.224	**22-24**	235	251	**6**	8011578935344
1051.247	**24-27**	255	324	**6**	8011578935368
1051.302	**30-32**	275	413	**6**	8011578935382

1051C SERIE 10 CHIAVI RACCORDI - scatola
SET 10 FLARE NUT WRENCHES - box

Contenuto - content:
1051.080 8-10
1051.091 9-11
1051.101 10-11
1051.113 11-13
1051.124 12-14
1051.179 17-19
1051.192 19-22
1051.224 22-24
1051.247 24-27
1051.302 30-32

serie - set **10**

	Pz.		
1051.310	**10**	1798	8011578051303

1052 CHIAVE PER PONTEGGI
OFFSET DOUBLE RING WRENCH BUILDING

1052.212	**21-22**	335	486	**6**	8011578935689

1053 CHIAVE PER PONTEGGI A CRICCHETTO REVERSIBILE
RACHET WRENCH REVERSIBLE FOR BUILDING

1053.212	**21-22**	310	414	**2**	8011578961084

Forzo Tecnologie Srl

1055 CHIAVE COMBINATA A CRICCHETTO SNODATA
COMBINATION FLEX RATCHET WRENCH

72 denti - ripresa 5°
72 teeth - 5° action

snodata
flex

		L			
1055.080	**8-8**	145	50	**6**	8011578935405
1055.090	**9-9**	155	68	**6**	8011578935429
1055.100	**10-10**	155	66	**6**	8011578935443
1055.110	**11-11**	165	85	**6**	8011578935467
1055.120	**12-12**	180	117	**6**	8011578935481
1055.130	**13-13**	180	114	**6**	8011578935504
1055.140	**14-14**	190	136	**6**	8011578935528
1055.150	**15-15**	205	155	**6**	8011578935542
1055.160	**16-16**	205	162	**6**	8011578935566
1055.170	**17-17**	222	227	**6**	8011578935580
1055.180	**18-18**	222	213	**6**	8011578935603
1055.190	**19-19**	240	250	**6**	8011578935627

1056 SERIE CHIAVI COMBINATE A CRICCHETTO SNODATE - scatola
SET COMBINATION FLEX RATCHET WRENCHES - box

Contenuto - content:
1055.080 8-8
1055.100 10-10
1055.130 13-13
1055.170 17-17
1055.190 19-19

serie - set 5

	Pz.		
1056.050	**5**	747	8011578056308

Contenuto - content:
1055.080 8-8
1055.100 10-10
1055.110 11-11
1055.120 12-12
1055.130 13-13
1055.140 14-14
1055.170 17-17
1055.190 19-19

serie - set 8

	Pz.		
1056.080	**8**	1080	8011578056322

Contenuto - content:
1055.080 8-8
1055.090 9-9
1055.100 10-10
1055.110 11-11
1055.120 12-12
1055.130 13-13
1055.140 14-14
1055.150 15-15
1055.160 16-16
1055.170 17-17
1055.180 18-18
1055.190 19-19

serie - set 12

	Pz.		
1056.120	**12**	1674	8011578056339

1056 SERIE CHIAVI COMBINATE A CRICCHETTO SNODATE
SET COMBINATION FLEX RATCHET WRENCHES

Contenuto - content:
1055.080 8-8
1055.100 10-10
1055.130 13-13
1055.170 17-17
1055.190 19-19

serie - set 5

	Pz.		
1056.905	**5**	808	8011578056346

Nuovo Tecnologie Srl

1056 SERIE CHIAVI COMBINATE A CRICCHETTO SNODATE
SET COMBINATION FLEX RATCHET WRENCHES

Contenuto - content:

1055.080	8-8	1055.130	13-13	1055.170	17-17
1055.100	10-10	1055.140	14-14	1055.180	18-18
1055.110	11-11	1055.150	15-15	1055.190	19-19
1055.120	12-12	1055.160	16-16		

serie - set 11

	Pz.		
1056.911	**11**	1758	8011578056353

1056 SERIE CHIAVI COMBINATE A CRICCHETTO SNODATE
SET COMBINATION FLEX RATCHET WRENCHES

Contenuto - content:

1055.080	8-8	1055.140	14-14
1055.100	10-10	1055.150	15-15
1055.110	11-11	1055.170	17-17
1055.120	12-12	1055.190	19-19
1055.130	13-13		

serie - set 9

clip in plastica compatta
compact plastic clip

	Pz.			
1056.909	**9**	1305	8011578970567	new

1057 SERIE CHIAVI COMBINATE A CRICCHETTO SNODATE - busta tela avvolgibile
SET COMBINATION FLEX RATCHET WRENCHES - envelope canvas roller blind

Contenuto - content:

1055.080	8-8	1055.130	13-13
1055.100	10-10	1055.140	14-14
1055.110	11-11	1055.170	17-17
1055.120	12-12	1055.190	19-19

serie - set 8

	Pz.		
1057.080	**8**	1123	8011578057350

Contenuto - content:

1055.080	8-8	1055.140	14-14
1055.090	9-9	1055.150	15-15
1055.100	10-10	1055.160	16-16
1055.110	11-11	1055.170	17-17
1055.120	12-12	1055.180	18-18
1055.130	13-13	1055.190	19-19

serie - set 12

	Pz.		
1057.120	**12**	1802	8011578057039

1058 ESPOSITORE 24 CHIAVI COMBINATE A CRICCHETTO SNODATE
DISPLAY 24 COMBINATION FLEX RATCHET WRENCHES

Contenuto - content:

1055.080	8-8	Nr. 2	1055.140	14-14	Nr. 2
1055.090	9-9	Nr. 2	1055.150	15-15	Nr. 2
1055.100	10-10	Nr. 2	1055.160	16-16	Nr. 2
1055.110	11-11	Nr. 2	1055.170	17-17	Nr. 2
1055.120	12-12	Nr. 2	1055.180	18-18	Nr. 2
1055.130	13-13	Nr. 2	1055.190	19-19	Nr. 2

	L		
1058.010	300 x 370 x 100	5700	8011578058401
1058.210	vuoto - empty		8011578975722

Zozzo Tecnologie Srl

1060 CHIAVE COMBINATA A CRICCHETTO REVERSIBILE
COMBINATION REVERSIBLE RATCHET WRENCH

reversibile
reversible

72 denti - ripresa 5° - testa inclinata 15°
72 teeth - 5° action - 15° offset head

		L			
1060.080	**8-8**	140	42	**6**	8011578935702
1060.090	**9-9**	150	46	**6**	8011578935726
1060.100	**10-10**	160	66	**6**	8011578935740
1060.110	**11-11**	160	66	**6**	8011578935764
1060.120	**12-12**	170	84	**6**	8011578935788
1060.130	**13-13**	177	106	**6**	8011578935801
1060.140	**14-14**	185	126	**6**	8011578935825
1060.150	**15-15**	197	130	**6**	8011578935849
1060.160	**16-16**	210	150	**6**	8011578935863
1060.170	**17-17**	220	193	**6**	8011578935887
1060.180	**18-18**	230	216	**6**	8011578935900
1060.190	**19-19**	240	242	**6**	8011578935924
1060.220	**22-22**	280	378	**6**	8011578965785
1060.240	**24-24**	310	500	**6**	8011578965808

1061 SERIE CHIAVI COMBINATE A CRICCHETTO REVERSIBILE - scatola cartone
SET COMBINATION REVERSIBLE RATCHET WRENCHES - box

Contenuto - content:
1060.080 8-8
1060.100 10-10
1060.110 11-11
1060.120 12-12
1060.130 13-13
1060.140 14-14
1060.170 17-17
1060.190 19-19

serie - set 8

	Pz.		
1061.080	**8**	962	8011578061081

Contenuto - content:
1060.080 8-8
1060.090 9-9
1060.100 10-10
1060.110 11-11
1060.120 12-12
1060.130 13-13
1060.140 14-14
1060.150 15-15
1060.160 16-16
1060.170 17-17
1060.180 18-18
1060.190 19-19

serie - set 12

	Pz.		
1061.120	**12**	1498	8011578061128

1061 SERIE CHIAVI COMBINATE A CRICCHETTO REVERSIBILE
SET COMBINATION REVERSIBLE RATCHET WRENCHES

Contenuto - content:
1060.080 8-8
1060.100 10-10
1060.130 13-13
1060.170 17-17
1060.190 19-19

serie - set 5

	Pz.		
1061.905	**5**	692	8011578969042

Zorzo Tecnologie Srl

1061 SERIE CHIAVI COMBINATE A CRICCHETTO REVERSIBILE
SET COMBINATION REVERSIBLE RATCHET WRENCHES

Contenuto - content:

1060.080	8-8	1060.150	15-15
1060.100	10-10	1060.160	16-16
1060.110	11-11	1060.170	17-17
1060.120	12-12	1060.180	18-18
1060.130	13-13	1060.190	19-19
1060.140	14-14		

serie - set 11

	Pz.		
1061.911	11	1548	8011578969066

1061 SERIE CHIAVI COMBINATE A CRICCHETTO REVERSIBILE
SET COMBINATION REVERSIBLE RATCHET WRENCHES

Contenuto - content:

1060.080	8-8	1060.140	14-14
1060.100	10-10	1060.150	15-15
1060.110	11-11	1060.170	17-17
1060.120	12-12	1060.190	19-19
1060.130	13-13		

serie - set 9

clip in plastica compatta
compact plastic clip

	Pz.			
1061.909	9	1085	8011578970604	new

1062 SERIE CHIAVI COMBINATE A CRICCHETTO REVERSIBILE - busta tela avvolgibile
SET COMBINATION REVERSIBLE RATCHET WRENCHES - envelope canvas roller blind

Contenuto - content:
1060.080 8-8
1060.100 10-10
1060.110 11-11
1060.120 12-12
1060.130 13-13
1060.140 14-14
1060.170 17-17
1060.190 19-19

serie - set 8

	Pz.		
1062.080	8	983	8011578062088

Contenuto - content:
1060.080 8-8
1060.090 9-9
1060.100 10-10
1060.110 11-11
1060.120 12-12
1060.130 13-13
1060.140 14-14
1060.150 15-15
1060.160 16-16
1060.170 17-17
1060.180 18-18
1060.190 19-19

serie - set 12

	Pz.		
1062.120	12	1585	8011578062125

Zorzo Tecnologie Srl

1063 SERIE CHIAVI COMBINATE A CRICCHETTO REVERSIBILE - scatola cartone
SET COMBINATION REVERSIBLE RATCHET WRENCHES - box

Contenuto - content:

1060.080	8-8	1060.130	13-13
1060.100	10-10	1060.140	14-14
1060.110	11-11	1060.170	17-17
1060.120	12-12	1060.190	19-19

serie - set 8

	Pz.		
1063.080	**8**	1028	8011578063085

Contenuto - content:

1060.080	8-8	1060.140	14-14
1060.090	9-9	1060.150	15-15
1060.100	10-10	1060.160	16-16
1060.110	11-11	1060.170	17-17
1060.120	12-12	1060.180	18-18
1060.130	13-13	1060.190	19-19

serie - set 12

	Pz.		
1063.120	**12**	1674	8011578063122

1064 ESPOSITORE 24 CHIAVI COMBINATE A CRICCHETTO REVERSIBILE
DISPLAY 24 COMBINATION REVERSIBLE RATCHET WRENCHES

Contenuto - content:

1060.080	8-8	Nr. 2	1060.140	14-14	Nr. 2
1060.090	9-9	Nr. 2	1060.150	15-15	Nr. 2
1060.100	10-10	Nr. 2	1060.160	16-16	Nr. 2
1060.110	11-11	Nr. 2	1060.170	17-17	Nr. 2
1060.120	12-12	Nr. 2	1060.180	18-18	Nr. 2
1060.130	13-13	Nr. 2	1060.190	19-19	Nr. 2

	L		
1064.010	300 x 370 x 100	5200	8011578969721

1065 CHIAVE COMBINATA A CRICCHETTO SEMPLICE - CORTA
COMBINATION RATCHET WRENCH - STUBBY

		L			
1065.080	**8**	90	32	**2**	8011578967383
1065.100	**10**	95	42	**2**	8011578967406
1065.130	**13**	107	82	**2**	8011578967420
1065.170	**17**	126	152	**2**	8011578967444
1065.190	**19**	136	170	**2**	8011578967468

1065 SERIE 5 CHIAVI COMBINATE A CRICCHETTO SEMPLICE - CORTA
SET 5 COMBINATION RATCHET WRENCHES - STUBBY

Contenuto - content:
1065.080 8-8
1065.100 10-10
1065.130 13-13
1065.170 17-17
1065.190 19-19

	Pz.		
1065.905	**5**	552	8011578969080

Zorzi Tecnologie Srl

1067 CHIAVE COMBINATA A CRICCHETTO SEMPLICE
COMBINATION RATCHET WRENCH

72 denti - ripresa 5°
72 teeth - 5° action

		L			
1067.080	**8-8**	135	40	**6**	8011578963187
1067.100	**10-10**	153	64	**6**	8011578963200
1067.130	**13-13**	178	100	**6**	8011578963224
1067.170	**17-17**	222	196	**6**	8011578963248
1067.190	**19-19**	240	246	**6**	8011578963262

1068 SERIE 5 CHIAVI COMBINATE A CRICCHETTO SEMPLICE - scatola
SET 5 COMBINATION RATCHET WRENCHES - box

Contenuto - content:
1067.080 8-8
1067.100 10-10
1067.130 13-13
1067.170 17-17
1067.190 19-19

serie - set 5

	Pz.		
1068.050	**5**	692	8011578067014

1068 SERIE 5 CHIAVI COMBINATE A CRICCHETTO SEMPLICE
SET 5 COMBINATION RATCHET WRENCHES

Contenuto - content:
1067.080 8-8
1067.100 10-10
1067.130 13-13
1067.170 17-17
1067.190 19-19

serie - set 5

	Pz.		
1068.905	**5**	716	8011578067007

1069 ADATTATORE PER CHIAVI A CRICCHETTO
ADAPTER FOR RATCHET WRENCHES

		per chiave for wrench			
1069.104	1/4"	mm. 10	8	**6**	8011578944247
1069.138	3/8"	mm. 13	18	**6**	8011578944261
1069.192	1/2"	mm. 19	48	**6**	8011578944285

	inserti-bit	per chiave for wrench			
1069.914	1/4"	mm. 10	8	**6**	8011578944308

1069.990	set 4 adattatori - adapters	88	**1**	8011578944322

new

Zorzi e Tecnologie Srl

1070 CHIAVE REGOLABILE - acciaio chrom-vanadium finitura cromata - impugnatura plasticata
ADJUSTABLE WRENCH - chrom-vanadium steel chrome plated finish - plastic handle

DIN 3117 ISO 6787

	L				
1070.015	**150**	19	152	**2**	8011578927073
1070.020	**200**	24	274	**2**	8011578927103
1070.025	**250**	30	450	**2**	8011578927134
1070.030	**300**	34	756	**2**	8011578927165
1070.037	**375**	44	1360	**1**	8011578943189
1070.045	**450**	55	1980	**1**	8011578943202

1071 CHIAVE REGOLABILE ERGONOMICA - acciaio chrom-vanadium finitura cromata
ADJUSTABLE WRENCH ERGONOMIC - chrom-vanadium steel chrome plated finish

	L					
1071.015	**150**	24	160	**2**	8011578973506	new
1071.020	**200**	29	285	**2**	8011578973520	new
1071.025	**250**	34	480	**2**	8011578973544	new
1071.030	**300**	40	800	**2**	8011578973568	new

1074 CHIAVI POLIGONALI CURVE PESANTI - acciaio chrom-vanadium finitura cromata
HEAVY-DUTY OFFSET RING WRENCHES - chrom-vanadium steel chrome plated finish

	⬢	L			
1074.024	**24**	182	462	**1**	8011578961107
1074.027	**27**	192	518	**1**	8011578961121
1074.030	**30**	202	590	**1**	8011578961145
1074.032	**32**	237	832	**1**	8011578961169
1074.036	**36**	247	910	**1**	8011578961183
1074.041	**41**	267	1062	**1**	8011578961206
1074.046	**46**	282	1434	**1**	8011578961220
1074.050	**50**	292	1450	**1**	8011578961244
1074.055	**55**	302	1650	**1**	8011578961268
1074.060	**60**	347	2700	**1**	8011578961282
1074.065	**65**	357	3100	**1**	8011578961305
1074.070	**70**	365	3400	**1**	8011578961329

1074Z IMPUGNATURA TUBO per chiavi poligonali curve pesanti (per chiave 1074)
PIPE for heavy-duty offset ring wrench (for wrench 1074)

	Ø	L				
1074.946	**19**	460	x mm 24/27/30	760	**1**	8011578961367
1074.961	**22**	610	x mm 32/36/41	1128	**1**	8011578961381
1074.976	**25**	760	x mm 46/50/55	1550	**1**	8011578961404
1074.986	**30**	860	x mm 60/65/70	2500	**1**	8011578961428

Zeta Tecnologie Srl

1075 CHIAVE A PERCUSSIONE A FORCHETTA
OPEN STRICKEN WRENCH

DIN 133

		L	Sp.			
1075.024	**24**	**160**	15	280	**1**	8011578941161
1075.027	**27**	**180**	15	350	**1**	8011578941444
1075.030	**30**	**190**	16	542	**1**	8011578941468
1075.032	**32**	**196**	17	770	**1**	8011578941482
1075.036	**36**	**210**	18	900	**1**	8011578941505
1075.041	**41**	**225**	19	1065	**1**	8011578941529
1075.046	**46**	**251**	20	1114	**1**	8011578941543
1075.050	**50**	**275**	20	1650	**1**	8011578941567
1075.055	**55**	**304**	23	2200	**1**	8011578941581
1075.060	**60**	**320**	24	2600	**1**	8011578941604
1075.065	**65**	**340**	28	2700	**1**	8011578941628
1075.070	**70**	**365**	30	4000	**1**	8011578941642
1075.075	**75**	**278**	30	5000	**1**	8011578960322
1075.080	**80**	**400**	37	5700	**1**	8011578941666
1075.085	**85**	**400**	37	6000	**1**	8011578960346
1075.090	**90**	**445**	38	8500	**1**	8011578941680
1075.095	**95**	**445**	39	9800	**1**	8011578941703
1075.100	**100**	**485**	42	12200	**1**	8011578941727

1076 CHIAVE A PERCUSSIONE POLIGONALE
RING STRICKEN WRENCH

DIN 7444

		L	Sp.				
1076.024	**24**	**167**	14	296	**1**	8011578941741	
1076.027	**27**	**179**	16	303	**1**	8011578941765	
1076.030	**30**	**191**	17	383	**1**	8011578941789	
1076.032	**32**	**197**	17	474	**1**	8011578941802	
1076.036	**36**	**206**	19	522	**1**	8011578941826	
1076.041	**41**	**231**	22	758	**1**	8011578941840	
1076.046	**46**	**241**	22	853	**1**	8011578941864	
1076.050	**50**	**255**	24	1134	**1**	8011578941888	
1076.055	**55**	**271**	25	1560	**1**	8011578941901	
1076.060	**60**	**279**	25	1500	**1**	8011578941925	
1076.065	**65**	**295**	28	2100	**1**	8011578941949	
1076.070	**70**	**323**	33	3100	**1**	8011578941963	
1076.075	**75**	**330**	34	3100	**1**	8011578960360	
1076.080	**80**	**361**	37	3200	**1**	8011578941987	
1076.085	**85**	**361**	37	4000	**1**	8011578960384	
1076.090	**90**	**390**	40	6000	**1**	8011578942007	
1076.095	**95**	**390**	40	6700	**1**	8011578942021	
1076.100	**100**	**400**	40	7400	**1**	8011578942045	
1076.105	**105**	**435**	46	9000	**1**	8011578973582	new
1076.110	**110**	**435**	46	8800	**1**	8011578973605	new
1076.115	**115**	**435**	46	8550	**1**	8011578973629	new
1076.120	**120**	**480**	51	11600	**1**	8011578973643	new
1076.125	**125**	**480**	51	11300	**1**	8011578973667	new
1076.130	**130**	**510**	57	13700	**1**	8011578973681	new
1076.135	**135**	**510**	59	13500	**1**	8011578973704	new
1076.140	**140**	**510**	61	13200	**1**	8011578973728	new

Zorzi Tecnologie Srl

1077 CHIAVE GAS
WRENCH GAS

		L			
1077.025	25	135	106	12	8011578961442

1078 CHIAVE DUE BOCCHE DIN 895 - finitura zincata
WRENCH DOUBLE OPEN DIN 895 - zinc finish

		L			
1078.067	6x7	96	16	12	8011578961466
1078.078	7x8	107	18	12	8011578961480
1078.083	8x9	110	24	12	8011578963040
1078.085	8x10	115	28	12	8011578961503
1078.101	10x11	118	32	12	8011578961527
1078.103	10x13	122	36	12	8011578961541
1078.123	12x13	142	42	12	8011578961565
1078.137	13x17	155	78	12	8011578961589
1078.145	14x15	145	60	12	8011578970666
1078.167	16x17	155	71	12	8011578970680
1078.175	17x19	170	104	12	8011578961602
1078.177	17x22	198	144	12	8011578961626
1078.189	18x19	170	77	21	8011578970703
1078.192	19x22	198	154	12	8011578961640
1078.194	19x24	207	168	12	8011578961664
1078.202	20x22	198	170	12	8011578961688
1078.224	22x24	218	170	6	8011578961701
1078.242	24x27	240	236	6	8011578961725
1078.243	24x30	265	400	6	8011578964627
1078.273	27x30	270	420	6	8011578964641
1078.302	30x32	275	436	6	8011578961749
1078.363	36x41	340	755	6	8011578969745
1078.416	41x46	385	1034	1	8011578973742
1078.465	46x50	420	1245	1	8011578973766
1078.505	50x55	465	1750	1	8011578973780
1078.556	55x60	500	1860	1	8011578973803

Zeta Tecnologie srl

1079 CHIAVE UNA BOCCA DIN 894 - finitura zincata
WRENCH SINGLE OPEN DIN 894 - zinc finish

1079.006	6		75	11	12	8011578961763	
1079.007	7		75	12	12	8011578961787	
1079.008	8		95	12	12	8011578961800	
1079.009	9		105	22	12	8011578961824	
1079.010	10		105	18	12	8011578961848	
1079.011	11		111	23	12	8011578970741	
1079.012	12		125	20	12	8011578965761	
1079.013	13		125	38	12	8011578961862	
1079.015	15		140	40	12	8011578969769	
1079.017	17		160	70	12	8011578961886	
1079.019	19		170	78	12	8011578961909	
1079.022	22		195	106	12	8011578961923	
1079.023	23		195	125	6	8011578971984	
1079.024	24		215	132	6	8011578961947	
1079.027	27		240	218	6	8011578961961	
1079.030	30		260	254	6	8011578961985	
1079.032	32		275	288	6	8011578962005	
1079.034	34		275	300	6	8011578963507	
1079.036	36		300	410	6	8011578962029	
1079.038	38		305	437	6	8011578965860	
1079.041	41		340	534	6	8011578962043	
1079.042	42		345	581	6	8011578969783	
1079.046	46		375	782	6	8011578962067	
1079.050	50		405	1200	6	8011578962081	
1079.055	55		450	1352	6	8011578962104	
1079.060	60		475	1756	6	8011578962128	
1079.065	65		515	1600	6	8011578962142	
1079.070	70		560	2000	2	8011578963064	
1079.075	75	nere-black	600	2990	2	8011578969806	
1079.080	80	nere-black	670	4140	2	8011578969820	
1079.085	85	nere-black	680	3980	1	8011578969844	
1079.090	90	nere-black	680	3700	1	8011578969868	
1079.095	95	nere-black	847	5800	1	8011578969882	
1079.100	100	nere-black	847	5500	1	8011578969905	
1079.105	105	nere-black	1000	7450	1	8011578969929	new
1079.110	110	nere-black	1000	7400	1	8011578973827	new
1079.115	115	nere-black	1000	7300	1	8011578973841	new
1079.120	120	nere-black	1000	7250	1	8011578973865	new
1079.125	125	nere-black	1000	7200	1	8011578973889	new
1079.130	130	nere-black	1000	7150	1	8011578973902	new
1079.135	135	nere-black	1000	7100	1	8011578973926	new

Zorzo Tecnologie Srl

1080 CHIAVE A TUBO DOPPIA - FERRO tipo leggero - finitura zincata
TUBULAR WRENCH - IRON light type - zinc finish

		L	foro-hole				
1080.067	**6-7**	95	5	35	**6**	8011578927196	DIN 896
1080.089	**8-9**	95	5	38	**6**	8011578927226	
1080.101	**10-11**	105	5	45	**6**	8011578927257	
1080.123	**12-13**	110	6,5	52	**6**	8011578927288	
1080.145	**14-15**	115	8	72	**6**	8011578927318	
1080.167	**16-17**	115	8	80	**6**	8011578927349	
1080.189	**18-19**	130	8	96	**6**	8011578927370	
1080.202	**20-22**	135	8	153	**6**	8011578927400	
1080.246	**24-26**	145	10	190	**6**	8011578927431	
1080.258	**25-28**	160	10	215	**6**	8011578927462	
1080.302	**30-32**	165	12	267	**6**	8011578927493	
1080.555	**55-55**	200	12	577	**2**	8011578927523	

1081 SERIE CHIAVI A TUBO - FERRO tipo leggero - scatola
SET TUBULAR WRENCHES - IRON light type - box

Contento - content:
1080.067 6-7 1080.123 12-13
1080.089 8-9 1080.145 14-15
1080.101 10-11 1080.167 16-17

serie - set 6

	Pz.		
1081.060	**6**	348	8011578081003

Contenuto - content:
1080.067 6-7 1080.145 14-15
1080.089 8-9 1080.167 16-17
1080.101 10-11 1080.189 18-19
1080.123 12-13 1080.202 20-22

serie - set 8

	Pz.		
1081.080	**8**	608	8011578081027

Contenuto - content:
1080.067 6-7 1080.189 18-19
1080.089 8-9 1080.202 20-22
1080.101 10-11 1080.246 24-26
1080.123 12-13 1080.258 25-28
1080.145 14-15 1080.302 30-32
1080.167 16-17

serie - set 11

	Pz.		
1081.110	**11**	1270	8011578081041

1090 CHIAVE A PIPA DOPPIA - FERRO tipo leggero - finitura zincata
OFFSET TUBULAR WRENCHES - IRON light type - zinc finish

		L				
1090.060	**6-6**	85	30	28	**6**	8011578927554
1090.070	**7-7**	85	30	32	**6**	8011578927585
1090.080	**8-8**	90	30	68	**6**	8011578927615
1090.090	**9-9**	90	35	70	**6**	8011578927646
1090.100	**10-10**	95	35	58	**6**	8011578927677
1090.110	**11-11**	100	40	92	**6**	8011578927707
1090.120	**12-12**	100	40	102	**6**	8011578927738
1090.130	**13-13**	110	50	100	**6**	8011578927769
1090.140	**14-14**	110	50	110	**6**	8011578927790
1090.150	**15-15**	110	50	130	**6**	8011578927820
1090.160	**16-16**	120	50	128	**6**	8011578927851
1090.170	**17-17**	120	55	138	**6**	8011578927882
1090.190	**19-19**	130	60	132	**6**	8011578927943
1090.200	**20-20**	135	70	205	**6**	8011578927974
1090.220	**22-22**	145	70	194	**6**	8011578928032

Zorzo Tecnologie

1092 CHIAVE A TUBO DOPPIA PROFESSIONALE - acciaio chrom vanadium
DOUBLE TUBULAR WRENCHES - PROFESSIONAL - chrom vanadium steel

DIN 896

		L	foro-hole			
1092.067	**6-7**	110	7	38	**6**	8011578935948
1092.089	**8-9**	110	7	42	**6**	8011578935962
1092.101	**10-11**	122	7	72	**6**	8011578935986
1092.123	**12-13**	140	9	93	**6**	8011578936006
1092.145	**14-15**	140	9	95	**6**	8011578936020
1092.167	**16-17**	152	10,5	124	**6**	8011578936044
1092.189	**18-19**	162	13	172	**6**	8011578936068
1092.202	**20-22**	172	13	253	**6**	8011578936082
1092.213	**21-23**	172	15	222	**2**	8011578936105
1092.246	**24-26**	195	15	407	**2**	8011578936129
1092.258	**25-28**	192	16	394	**2**	8011578936143
1092.279	**27-29**	200	16	414	**2**	8011578936167
1092.302	**30-32**	205	17	450	**2**	8011578936181

1093 SERIE CHIAVI TUBO DOPPIE - scatola cartone
SET DOUBLE TUBULAR WRENCHES - box

serie - set **8**

Contenuto - content:
1092.067 6-7
1092.089 8-9
1092.101 10-11
1092.123 12-13
1092.145 14-15
1092.167 16-17
1092.189 18-19
1092.202 20-22

	Pz.		
1093.080	**8**	917	8011578093105

serie - set **12**

Contenuto - content:
1092.067 6-7
1092.089 8-9
1092.101 10-11
1092.123 12-13
1092.145 14-15
1092.167 16-17
1092.189 18-19
1092.202 20-22
1092.213 21-23
1092.246 24-26
1092.258 25-28
1092.302 30-32

	Pz.		
1093.120	**12**	2500	8011578093150

1093A SERIE CHIAVI TUBO DOPPIE - busta tela avvolgibile
SET DOUBLE TUBULAR WRENCHES - envelope canvas roller blind

serie - set **8**

Contenuto - content:
1092.067 6-7
1092.089 8-9
1092.101 10-11
1092.123 12-13
1092.145 14-15
1092.167 16-17
1092.189 18-19
1092.202 20-22

	Pz.		
1093.180	**8**	942	8011578093006

Zorzo Tecnologie Srl

1096 CHIAVE A TUBO DOPPIA PESANTE CR-VA
DOUBLE ENDED HEAVY TUBULAR WRENCH

		L	foro-hole			
1096.067	**6-7**	105	3,5	41	**6**	8011578936204
1096.089	**8-9**	110	4,0	54	**6**	8011578936228
1096.101	**10-11**	120	5,5	75	**6**	8011578936242
1096.123	**12-13**	135	5,5	102	**6**	8011578936266
1096.145	**14-15**	145	5,5	150	**6**	8011578936280
1096.167	**16-17**	155	8,0	184	**6**	8011578936303
1096.189	**18-19**	165	9,0	266	**6**	8011578936327
1096.202	**20-22**	175	10,0	322	**6**	8011578936341

1097 SERIE CHIAVI TUBO PESANTI - scatola cartone
SET ENDED HEAVY TUBULAR WRENCHES - box

Contenuto - content:
1096.067 6-7
1096.089 8-9
1096.101 10-11
1096.123 12-13
1096.145 14-15
1096.167 16-17
1096.189 18-19
1096.202 20-22

serie - set 8

	Pz.		
1097.080	**8**	1214	8011578097202

1097A SERIE CHIAVI TUBO PESANTI - busta tela avvolgibile
SET ENDED HEAVY TUBULAR WRENCES - envelope canvas roller blind

Contenuto - content:
1096.067 6-7
1096.089 8-9
1096.101 10-11
1096.123 12-13
1096.145 14-15
1096.167 16-17
1096.189 18-19
1096.202 20-22

serie - set 8

	Pz.		
1097.180	**8**	1264	8011578097059

1097Z SPINA DI MANOVRA PER CHIAVI A TUBO
DRIVE BAR

	Ø			
1097.910	5 x 8 x 10	102	**6**	8011578938987
1097.912	12	120	**6**	8011578969103
1097.914	14	130	**6**	8011578969127
1097.919	19	150	**6**	8011578969943

Forzo Tecnologie Srl

1098 CHIAVE A PIPA PASSANTE DOPPIA - ESAGONO - POLIGONALE
ANGLE OPEN SOCKETS WRENCH - HEXAGON - BIHEXAGON

		L				
1098.060	**6-6**	108	33	77	**6**	8011578936464
1098.070	**7-7**	110	36	73	**6**	8011578936488
1098.080	**8-8**	113	34	89	**6**	8011578936501
1098.090	**9-9**	122	35	86	**6**	8011578936525
1098.100	**10-10**	131	40	114	**6**	8011578936549
1098.110	**11-11**	138	40	125	**6**	8011578936563
1098.120	**12-12**	145	42	164	**6**	8011578936587
1098.130	**13-13**	162	44	192	**6**	8011578936600
1098.140	**14-14**	170	46	204	**6**	8011578936624
1098.150	**15-15**	180	48	217	**6**	8011578936648
1098.160	**16-16**	185	52	244	**6**	8011578936662
1098.170	**17-17**	190	52	306	**6**	8011578936686
1098.180	**18-18**	200	59	356	**6**	8011578936709
1098.190	**19-19**	210	59	442	**6**	8011578936723
1098.200	**20-20**	220	65	482	**2**	8011578936747
1098.210	**21-21**	222	68	575	**2**	8011578936761
1098.220	**22-22**	230	68	548	**2**	8011578936785
1098.230	**23-23**	245	75	678	**2**	8011578936808
1098.240	**24-24**	250	80	782	**2**	8011578936822
1098.270	**27-27**	285	90	975	**2**	8011578936846
1098.300	**30-30**	320	100	1352	**2**	8011578936860
1098.320	**32-32**	355	105	1526	**2**	8011578936884

1099 SERIE CHIAVI PIPA DOPPIE - scatola cartone
SET ANGLE OPEN SOCKETS WRENCHES - box

serie - set **8**

Contenuto - content:

1098.080	8-8	1098.130	13-13
1098.090	9-9	1098.140	14-14
1098.100	10-10	1098.170	17-17
1098.110	11-11	1098.190	19-19

	Pz.		
1099.080	**8**	1636	8011578099305

serie - set **12**

Contenuto - content:

1098.060	6-6	1098.100	10-10	1098.140	14-14
1098.070	7-7	1098.110	11-11	1098.170	17-17
1098.080	8-8	1098.120	12-12	1098.190	19-19
1098.090	9-9	1098.130	13-13	1098.220	22-22

	Pz.		
1099.120	**12**	2600	8011578099350

serie - set **17**

Contenuto - content:

1098.060	6-6	1098.120	12-12	1098.180	18-18
1098.070	7-7	1098.130	13-13	1098.190	19-19
1098.080	8-8	1098.140	14-14	1098.200	20-20
1098.090	9-9	1098.150	15-15	1098.210	21-21
1098.100	10-10	1098.160	16-16	1098.220	22-22
1098.110	11-11	1098.170	17-17		

	Pz.		
1099.170	**17**	4400	8011578099404

Zorzo Tecnologie Srl

1099 SERIE CHIAVI PIPA DOPPIE - scatola cartone
SET ANGLE OPEN SOCKETS WRENCHES - box

Contenuto - content:

1098.060	6-6	1098.140	14-14	1098.220	22-22
1098.070	7-7	1098.150	15-15	1098.230	23-23
1098.080	8-8	1098.160	16-16	1098.240	24-24
1098.090	9-9	1098.170	17-17	1098.270	27-27
1098.100	10-10	1098.180	18-18	1098.300	30-30
1098.110	11-11	1098.190	19-19	1098.320	32-32
1098.120	12-12	1098.200	20-20		
1098.130	13-13	1098.210	21-21		

serie - set 22

	Pz.		
1099.220	**22**	9600	8011578099459

1099A SERIE CHIAVI PIPA DOPPIE - busta tela avvolgibile
SET ANGLE OPEN SOCKETS WRENCHES - envelope canvas roller blind

Contenuto - content:

1098.080	8-8
1098.090	9-9
1098.100	10-10
1098.110	11-11
1098.130	13-13
1098.140	14-14
1098.170	17-17
1098.190	19-19

serie - set 8

	Pz.		
1099.980	**8**	1600	8011578099473

1100 ESPOSITORE 78 CHIAVI TUBO E PIPA
DISPLAY 78 TUBULAR AND ANGLE WRENCHES

Contenuto - content:

1092.067	Nr. 2	1098.120	Nr. 2
1092.089	Nr. 2	1098.130	Nr. 2
1092.101	Nr. 2	1098.140	Nr. 2
1092.123	Nr. 2	1098.150	Nr. 2
1092.145	Nr. 2	1098.160	Nr. 2
1092.167	Nr. 2	1098.170	Nr. 2
1092.189	Nr. 2	1098.180	Nr. 2
1092.202	Nr. 2	1098.190	Nr. 2
1092.213	Nr. 2	1098.200	Nr. 2
1092.246	Nr. 2	1098.210	Nr. 2
1092.258	Nr. 2	1098.220	Nr. 2
1092.279	Nr. 2		
1092.302	Nr. 2		
1096.067	Nr. 2		
1096.089	Nr. 2		
1096.101	Nr. 2		
1096.123	Nr. 2		
1096.145	Nr. 2		
1096.167	Nr. 2		
1096.189	Nr. 2		
1096.202	Nr. 2		
1097.910	Nr. 2		
1098.060	Nr. 2		
1098.070	Nr. 2		
1098.080	Nr. 2		
1098.090	Nr. 2		
1098.100	Nr. 2		
1098.110	Nr. 2		

	⊢L⊣		
1100.010	400 x 690	26300	8011578099497
1100.210	vuoto - empty	4400	8011578099510

Zorzo Tecnologie Srl

1150 CHIAVE A "T" SNODATA LUNGA - acciaio chrom-vanadium finitura cromata
WRENCH "T" HANDLE LONG - CARDANIC - chrom-vanadium steel chrome plated finish

		L			
1150.060	**6**	400	242	**2**	8011578928063
1150.070	**7**	400	186	**2**	8011578928094
1150.080	**8**	400	184	**2**	8011578928124
1150.090	**9**	400	248	**2**	8011578928155
1150.100	**10**	440	292	**2**	8011578928186
1150.110	**11**	460	376	**2**	8011578928216
1150.120	**12**	460	296	**2**	8011578928247
1150.130	**13**	460	392	**2**	8011578928278
1150.140	**14**	460	390	**2**	8011578928308
1150.150	**15**	460	588	**2**	8011578928339
1150.160	**16**	500	556	**2**	8011578928360
1150.170	**17**	500	590	**2**	8011578928391
1150.180	**18**	500	552	**2**	8011578928421
1150.190	**19**	500	608	**2**	8011578928452
1150.200	**20**	500	636	**2**	8011578928483
1150.210	**21**	520	946	**2**	8011578928513
1150.220	**22**	520	940	**2**	8011578928544
1150.240	**24**	520	1394	**2**	8011578928575

1150X SERIE 4 CHIAVI ESAGONO A "T" SNODATE
SET 4 HEXAGON CARDANIC WRENCHES "T" HANDLE

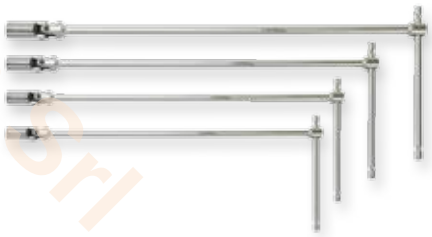

Contenuto-content:
1150.080 8
1150.100 10
1150.130 13
1150.170 17

serie - set **4**

	Pz.		
1150.904	**4**	1472	8011578943721

1150FX SERIE 7 CHIAVI ESAGONO A "T" SNODATE
SET 7 HEXAGON CARDANIC WRENCHES "T" HANDLE

Contenuto-content:
1150.070 7
1150.080 8
1150.100 10
1150.120 12
1150.130 13
1150.140 14
1150.170 17

serie - set **7**

	Pz.		
1150.907	**7**	2330	8011578970642

zorzo tecnologie srl

1150Z SERIE 18 CHIAVI A "T" SNODATE LUNGHE
SET 18 WRENCHES "T" HANDLE LONG - CARDANIC

serie - set 18

Contenuto-content:

1150.060	6	1150.150	15
1150.070	7	1150.160	16
1150.080	8	1150.170	17
1150.090	9	1150.180	18
1150.100	10	1150.190	19
1150.110	11	1150.200	20
1150.120	12	1150.210	21
1150.130	13	1150.220	22
1150.140	14	1150.240	24

	Pz.		
1150.910	**18**	9600	8011578001582

1152 CHIAVE "T" SNODATA LUNGA ESAGONO MASCHIO
WRENCH "T" HANDLE - CARDANIC - HEX MALE

		L			
1152.030	**3**	405	186	**2**	8011578938888
1152.040	**4**	405	186	**2**	8011578938901
1152.050	**5**	415	300	**2**	8011578938925
1152.060	**6**	415	300	**2**	8011578938949
1152.080	**8**	445	390	**2**	8011578938963

1153 CHIAVE "T" SNODATA LUNGA TORX MASCHIO
WRENCH "T" HANDLE - CARDANIC - TORX MALE

		L				
1153.020	**TX 20**	415	300	**2**	8011578974626	new
1153.025	**TX 25**	415	300	**2**	8011578974640	new
1153.027	**TX 27**	415	300	**2**	8011578974664	new
1153.030	**TX 30**	415	300	**2**	8011578974688	new
1153.040	**TX 40**	415	300	**2**	8011578974701	new
1153.045	**TX 45**	415	300	**2**	8011578974725	new

1155 CHIAVE A "T" SNODATA LUNGA ATTACCO PER CHIAVI A BUSSOLA - acciaio chrom-vanadium finitura cromata
WRENCH "T" HANDLE LONG - CARDANIC FOR SOCKET - chrom-vanadium steel chrome plated finish

		L			
1155.005	**1/4"**	395	180	**2**	8011578928629
1155.010	**3/8"**	438	375	**2**	8011578928605
1155.020	**1/2"**	500	646	**2**	8011578928636

1158 CHIAVE A "T" SNODATA LUNGA CANDELE
WRENCH LONG "T" HANDLE - CARDANIC - SPARK PLUE

		L			
1158.140	**14**	480	610	**2**	8011578949587
1158.160	**16**	480	614	**2**	8011578938840
1158.200	**21**	480	640	**2**	8011578938864

Long Tecnologie Srl

1170 CHIAVE A "T" SNODATA CANDELE
WRENCH "T" HANDLE - CARDANIC - SPARK PLUE

		L			
1170.016	16	240	248	2	8011578967482
1170.021	21	240	242	2	8011578967505

1325 CHIAVI A "T" CORTE - acciaio finitura nichelata
"T" HANDLE SHORT WRENCHES - steel nickel plated finish

		L			
1325.070	7	80 x 70	42	6	8011578928759
1325.080	8	95 x 85	60	6	8011578928780
1325.100	10	115 x 100	90	6	8011578928841
1325.120	12	115 x 100	95	6	8011578928902
1325.130	13	135 x 125	166	6	8011578928933

1328 CHIAVE A "T" - acciaio chrom-vanadium finitura cromata
"T" HANDLE WRENCH - chrom-vanadium steel chrome plated finish

		L			
1328.060	6	215	130	2	8011578936907
1328.070	7	215	155	2	8011578936921
1328.080	8	235	190	2	8011578936945
1328.090	9	235	256	2	8011578936969
1328.100	10	260	258	2	8011578936983
1328.110	11	260	288	2	8011578937003
1328.120	12	260	330	2	8011578937027
1328.130	13	260	304	2	8011578937041
1328.140	14	260	453	2	8011578937065
1328.150	15	285	438	2	8011578937089
1328.160	16	285	414	2	8011578937102
1328.170	17	285	492	2	8011578937126
1328.180	18	285	538	2	8011578937140
1328.190	19	310	568	2	8011578937164
1328.220	22	310	735	2	8011578937188
1328.240	24	310	1000	2	8011578937201

1328.904 SERIE 4 CHIAVI ESAGONO A "T" - acciaio chrom-vanadium finitura cromata
SET 4 HEXAGON "T" HANDLE WRENCHES - chrom-vanadium steel chrome plated finish

serie - set 4

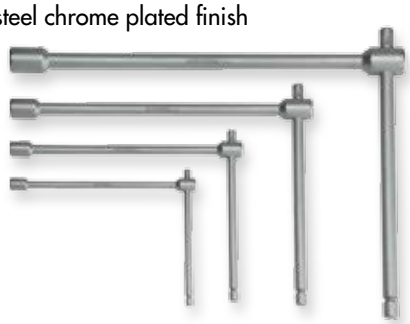

Contenuto-content:

1328.080	8	235
1328.100	10	260
1328.130	13	260
1328.170	17	285

	Pz.		
1328.904	4	1232	8011578943745

Zorzi Tecnologie Srl

1334 CHIAVE RUOTE AUTOCARRO - acciaio chrom-vanadium finitura cromata
HEAVY DUTY WHEEL WRENCH - chrom-vanadium steel chrome plated finish

	L			
1334.270	27 x 30	2000	2	8011578937225
1334.272	27 x 32	2100	2	8011578937249
1334.303	30 x 33	2200	2	8011578937263

1334Z BARRA
BAR

	L			
1334.910	19 x 400	800	2	8011578937287

1336 CHIAVE A CROCIERA PER RUOTE
CROSS WHEEL WRENCH

		L	Ø			
1336.179	17 x 19 x 22 x 1/2"	380	16	1350	1	8011578937348
1336.247	24 x 27 x 32 x 3/4"	625	22	4100	1	8011578937362

1338 LEVAGOMME
TIRE LEVEL

	L			
1338.050	mm 500	733	2	8011578948764

1339 LEVERINO
LEVEL

	L			
1339.010	450 x 16	mm. 20	2	8011578969967

Forzo Tecnologie Srl

1345 STRETTOIO A VITE - acciaio forgiato - finitura cromata
CLAMP WITH SCREW - forged - chrome finish

	L				
1345.250	250 x 120	22,00 x 10,50	1200	1	8011578948566
1345.300	300 x 140	25,00 x 12,00	1800	1	8011578948580
1345.400	400 x 120	25,00 x 12,00	1900	1	8011578948603
1345.500	500 x 120	25,00 x 12,00	2100	1	8011578948627
1345.600	600 x 120	25,00 x 12,00	2300	1	8011578948641

1347 STRETTOIO A LEVA CHIUSURA RAPIDA - acciaio forgiato - finitura cromata
QUICKLY ADJUSTABLE CLAMP - forged - chrome finish

	L				
1347.250	250 x 120	22,00 x 10,50	2400	1	8011578948665
1347.300	300 x 140	25,00 x 12,00	2500	1	8011578948689
1347.400	400 x 120	25,00 x 12,00	2800	1	8011578948702
1347.500	500 x 120	25,00 x 12,00	3000	1	8011578948726

1348 MORSETTO
CLAMP

	L				
1348.007	75	800	1	8011578973940	new
1348.010	100	950	1	8011578973964	new
1348.012	125	1100	1	8011578973988	new

1349 MORSA - con serratubo - ACCIAIO
VICE - with pipe - STEEL

	L				
1349.010	100	6000	1	8011578974008	new
1349.012	125	11000	1	8011578974022	new
1349.015	150	20400	1	8011578974046	new

1349... MORSA CON BASE GIREVOLE - con serratubo - ACCIAIO
VICE WITH WITH SWIVEL BASE - with pipe - STEEL

	L				
1349.110	100	7000	1	8011578974060	new
1349.112	125	12600	1	8011578974084	new
1349.115	150	22400	1	8011578974107	new

1349... BASE GIREVOLE PER MORSA
SWIVEL BASE

	L				
1349.810	100	1000	1	8011578974121	new
1349.812	125	1500	1	8011578974145	new
1349.815	150	2000	1	8011578974169	new

Zorzo Tecnologie Srl

1350 CHIAVE A SETTORE SNODATA NASELLO QUADRO - acciaio chrom-vanadium finitura cromata
FLEX HOOK WRENCH - SQUARE NOSE - chrom-vanadium steel chrome plated finish

	Ø	L			
1350.035	15÷35	168	100	**1**	8011578940485
1350.050	35÷50	202	187	**1**	8011578940508
1350.080	50÷80	280	405	**1**	8011578940522
1350.120	80÷120	345	724	**1**	8011578940546
1350.180	120÷180	492	1294	**1**	8011578940560

1352 CHIAVE A SETTORE FISSA NASELLO QUADRO - acciaio chrom-vanadium finitura cromata
FIX HOOK WRENCH - SQUARE NOSE - chrom-vanadium steel chrome plated finish

	Ø	L			
1352.028	25÷28	135	56	**1**	8011578940584
1352.032	30÷32	135	56	**1**	8011578940607
1352.036	34÷36	170	56	**1**	8011578940621
1352.042	40÷42	170	92	**1**	8011578940645
1352.050	45÷50	205	152	**1**	8011578940669
1352.055	52÷55	205	154	**1**	8011578940683
1352.062	58÷62	240	245	**1**	8011578940706
1352.075	68÷75	240	240	**1**	8011578940720
1352.090	80÷90	280	380	**1**	8011578940744
1352.100	98÷100	280	367	**1**	8011578940768
1352.115	110÷115	335	662	**1**	8011578940782
1352.130	120÷130	335	646	**1**	8011578940805
1352.145	135÷145	385	1134	**1**	8011578940829
1352.165	155÷165	385	1134	**1**	8011578940843
1352.195	180÷195	465	1140	**1**	8011578940867
1352.220	205÷220	465	1140	**1**	8011578972004

new

Polo Tecnologie Srl

1360 CHIAVE A NASTRO PER FILTRI OLIO
OIL FILTER WRENCH

	Ø			
1360.011	65-110	250	2	8011578944124
1360.015	110-155	256	2	8011578944148

1360A NASTRO PER CHIAVI FILTRI OLIO art. 1360
SPARE FOR OIL FILTER WRENCHES art. 1360

	L			
1360.211	110	14	1	8011578964665
1360.215	155	17	1	8011578964689

1362 CHIAVE A CATENA PER FILTRI OLIO ATTACCO 1/2"
OIL FILTER WRENCH CHAIN 1/2"

	Ø			
1362.015	60-115	388	1	8011578944162

1363 CHIAVE A CATENA CON MANICO SNODATO PER FILTRI OLIO
OIL FILTER WRENCH WITH FLEX HANDLE

	Ø			
1363.015	60-115	766	1	8011578944186

1364 CHIAVE A NASTRO
OIL FILTER WRENCH

	Ø			
1364.010	60-140	200	1	8011578969981

1365 CASSETTA 14 CHIAVI PER TAPPI OLIO - 3/8"
SET 14 SOCKETS FOR OIL CAPS - 3/8"

Contenuto-content:
esagono-hexagon: mm. 8 9 10 12 14 17
quadro-square: mm. 7 8 11 13 5/16" 3/8"
quadro femmina-female square mm. 10
triangolo-triangular

	L		
1365.010	220 x 90 x 50	784	8011578944346

Zoppi Tecnologie Srl

1366 CHIAVE TAPPI OLIO
WRENCH FOR OIL CAPS

1366.010	290	mm 8 x 10	257	6	8011578971380

1367 SERIE 30 CHIAVI A TAZZA FILTRI OLIO
SET 30 CUP FILTER WRENCHES

Contenuto - content:
diametri da 65 mm a 108 mm
lati da 6 a 45
3/8" M - 1/2" F

1367.010	620 x 510 x 90	7100	8011578964702

1369 SERIE 37 UTENSILI PISTONCINI FRENI 3/8"
SET 37 BRAKE CALIPER TOOLS 3/8"

Contenuto - content:
mandrini di rotazione destro e sinistro
left and right helix bolt

1369.010	435 x 305 x 60	4250	8011578964726

1370 CHIAVE CONNETTORI FRENI
FLAT NUT WRENCH

1370.101	10 x 11	175	106	6	8011578964740

Zorzo Tecnologie Srl

1371 PRESSORE MOLLE AMMORTIZZATE - 3 PAIA GRAFFE
MACPHERSON SPRING DUMPER EXTRACTOR

lunghezza/length 453 mm
capacità graffe 80-115 mm
88-160 mm
126-212 mm
NM 10.250 MAX

1371.010	510 x 440 x 120	14700	8011578964764

1380 SERIE 7 PINZE FASCETTE STRINGITUBO
SET 7 UNIVERSAL HOSE CLAMP PLIERS

1380.010	48 x 380 x 100	3200	8011578964788

1383 PINZA FASCETTA STRINGITUBO CON CAVO mm 630
HOSE CLAMP PLIER WITH CABLE mm 630

1383.010	210-630	470	1	8011578964801

1385 PINZA FASCETTA PUNTE GIR. 45° - MANICOTTI
HOSE CLAMP PLIER 45°

1385.010	235	226	1	8011578964825

1386 PINZA FASCETTA A SCATTO CLIC
CLIP-R COLLAR PLIER

1386.010	175	250	1	8011578964849

Zorzo Tecnologie srl

1388 PINZA FASCETTE - CON ARRESTO VARIE POSIZIONI
HOSE CLAMP PLIER - MULTI-STOP

	Ø	L			
1388.038	mm 6-38	240	320	**2**	8011578964863
1388.055	mm 22-55	240	334	**2**	8011578964887

1390 SERIE 3 PINZE PER STROZZATURA MANICOTTI ACQUA E BENZINA
SET 3 CLAMP PLIERS FOR NARROW WATER AND PETROL PIPE

Contenuto - content:
22-60 mm - 63 mm
22-42 mm - 29 mm
11-19 mm - 18 mm

	mm		
1390.010	150-180-250	226	8011578964900

1391 PRENDITUTTO FLESSIBILE MAGNETICO E GRIFFA
PICK-UP TOOL MAGNETIC AND CLAW

	L				
1391.010	700	145	**1**	8011578971403	new

1393 CASSETTA 6 BUSSOLE 3/8" PER CANDELETTE
BLOW CASE 6 SOCKETS 3/8"GLOW PLUG

Contenuto - content:
MM 8-9-10-12-14-16

1393.010	800	8011578972509	new

1394 CASSETTA 15 CHIAVI PER TENDITORE CINGHIA
BLOW CASE 15 TENSION PULLER WRENCHES

Contenuto - content:
TORX E10 - E12 - E14 - E16 - E18
ESAGONO - HEX mm 10 - 13 - 14 - 15 - 16 - 17 - 18 -19

1394.010	1540	8011578972448	new

ZorzoTecnologie Srl

1400

CHIAVE A BUSSOLA 1/4" BOCCA ESAGONALE PROFILO FLANK DRIVE - acciaio chrom-vanadium finitura cromata
SOCKET 1/4" HEXAGON FLANK DRIVE SECTION - chrom-vanadium steel chrome plated finish

DIN 3124 ISO 2725

1/4"

1400.040	**4**	25	6,7	12	10	**6**	8011578929084
1400.045	**4,5**	25	7,3	12	11	**6**	8011578929114
1400.050	**5**	25	8	12	11	**6**	8011578929145
1400.055	**5,5**	25	8,5	12	12	**6**	8011578929176
1400.060	**6**	25	9	12	12	**6**	8011578929206
1400.070	**7**	25	10	12	12	**6**	8011578929237
1400.080	**8**	25	11,8	12	12	**6**	8011578929268
1400.090	**9**	25	12,5	12	14	**6**	8011578929299
1400.100	**10**	25	14	12	14	**6**	8011578929329
1400.110	**11**	25	15,5	14	20	**6**	8011578929350
1400.120	**12**	25	17	15	22	**6**	8011578929381
1400.130	**13**	25	18	16	25	**6**	8011578929411

1400Z

SERIE 12 CHIAVI A BUSSOLA 1/4" - binario
SET 12 SOCKETS 1/4" - holding bar

Contenuto-content:

1400.040	1400.055	1400.080	1400.110
1400.045	1400.060	1400.090	1400.120
1400.050	1400.070	1400.100	1400.130

1/4"

1400.912	194	8011578944360

1400ZZ

BINARIO PER BUSSOLE 1/4" mm 185 - vuoto
HOLDING BAR FOR SOCKETS 1/4" mm 185 - empty

1/4"

1400.990	185	32	8011578944384

1402

CHIAVE A BUSSOLA 1/4" LUNGA
SOCKET 1/4" DEEP

1/4"

1402.040	**4**	50	11	7	15	**6**	8011578941185
1402.045	**4,5**	50	12	7	17	**6**	8011578941208
1402.050	**5**	50	12	8	18	**6**	8011578941222
1402.055	**5,5**	50	12	9	20	**6**	8011578941246
1402.060	**6**	50	12	9	20	**6**	8011578941260
1402.070	**7**	50	12	11	22	**6**	8011578941284
1402.080	**8**	50	12	12	23	**6**	8011578941307
1402.090	**9**	50	13	13	30	**6**	8011578941321
1402.100	**10**	50	14	14	38	**6**	8011578941345
1402.110	**11**	50	16	16	42	**6**	8011578941369
1402.120	**12**	50	17	17	48	**6**	8011578941383
1402.130	**13**	50	18	18	50	**6**	8011578941406
1402.140	**14**	50	19	19	68	**6**	8011578941420

1402Z

SERIE 12 CHIAVI A BUSSOLA 1/4" LUNGHE - binario
SET 12 SOCKETS 1/4" LONG - holding bar

Contenuto-content:

1402.040	1402.055	1402.080	1402.110
1402.045	1402.060	1402.090	1402.120
1402.050	1402.070	1402.100	1402.130

1/4"

1402.912	368	8011578944407

Lonzo Tecnologie Srl

1404 CHIAVE A BUSSOLA 1/4" FEMMINA TX E
SOCKET 1/4" TX E FEMALE

1/4"

1404.040	E 4	25	12	7	10	6	8011578944421
1404.050	E 5	25	12	7	10	6	8011578944445
1404.060	E 6	25	12	8	11	6	8011578944469
1404.070	E 7	25	12	9	12	6	8011578944483
1404.080	E 8	25	12	10	12	6	8011578944506
1404.100	E 10	25	12	13	18	6	8011578944520

1404Z SERIE 6 CHIAVI A BUSSOLA TORX 1/4" - binario
SET 6 SOCKETS TORX 1/4" - holding bar

Contenuto-content:

1404.040	E 4	1404.060	E 6	1404.080	E 8
1404.050	E 5	1404.070	E 7	1404.100	E 10

1/4"

1404.906	102	8011578944544

1405 CRICCHETTO REVERSIBILE 1/4" CON SGANCIO RAPIDO - acciaio chrom-vanadium finitura cromata - impugnatura plastica
RATCHET 1/4" REVERSIBLE QUICK RELEASE - chrom-vanadium steel chrome plated finish - plastic handle

72 denti - teeth

1/4"

	L					
1405.010	140	23 x 25,5	60	118	2	8011578929442

1405Z CRICCHETTO REVERSIBILE 1/4" TELESCOPICO - SNODATO - acciaio chrom-vanadium finitura cromata
RATCHET 1/4" REVERSIBLE TELESCOPIC - FLEX - chrom-vanadium steel chrome plated finish

72 denti - teeth

1/4"

	L					
1405.910	255/355	32 x 33	90	505	2	8011578969165

1406 CRICCHETTO REVERSIBILE 1/4" - sgancio rapido
RATCHET 1/4" REVERSIBLE - quick release

72 denti - teeth

1/4"

	L					
1406.010	140	25 x 29	75	186	2	8011578940089

1407 CRICCHETTO DOPPIO 1/4" FEMMINA ESAGONO PER INSERTI - 1/4" MASCHIO QUADRO PER BUSSOLE
DOUBLE RATCHET EXAGONAL FEMALE BITS 1/4" - 1/4" SQUARE MALE FOR SOCKETS

1/4"

	L			
1407.010	100	110	6	8011578964924

Zozo Tecnologie srl

1408 PROLUNGA 1/4" - acciaio chrom-vanadium finitura cromata
EXTENSION BAR 1/4" - chrom-vanadium steel chrome plated finish

1/4"

DIN 3122 ISO 3315

	L			
1408.075	75	33	6	8011578929473
1408.150	150	66	6	8011578929503

1410 LEVA A "T" 1/4" - acciaio chrom-vanadium finitura cromata
SLIDING "T" BAR 1/4" - chrom-vanadium steel chrome plated finish

1/4"

DIN 3322 ISO 3315

	L			
1410.010	115	44	6	8011578929534

1412 SNODO CARDANICO 1/4" - acciaio chrom-vanadium finitura cromata
UNIVERSAL JOINT 1/4" - chrom-vanadium steel chrome plated finish

1/4"

DIN 3123 ISO 3316

	L			
1412.010	41	26	6	8011578929565

1414 IMPUGNATURA PORTA BUSSOLE 1/4" - acciaio chrom-vanadium finitura cromata impugnatura plastica
HANDLE FOR SOCKET 1/4" - chrom-vanadium steel chrome plated finish - plastic handle

1/4"

DIN 3122 ISO 3315

	L			
1414.010	60	67	2	8011578929596

1420 ADATTATORE 1/4" PORTAINSERTI UNIVERSALE ESAGONO 1/4" (giraviti-esagoni-torx) - acc. chrom-vanadium fin. cromata
ADAPTER COUPLER 1/4" FOR HEXAGON BIT 1/4" (screwdriver-hexagon-torx) - chrom-vanadium steel chrome plated finish

1/4"

	L			
1420.010	26	14	6	8011578929626

1425 RACCORDO AUMENTATORE DA 1/4" F A 3/8" M
ADAPTER FROM 1/4" FEMALE TO 3/8" MALE

1/4" 3/8"

DIN 3123

1425.010	20	6	8011578929657

1430 CHIAVE A BUSSOLA 1/4" - intaglio
SOCKET 1/4" - flat

1/4"

		L			
1430.300	3	33	12	6	8011578937386
1430.400	4	33	13	6	8011578937409
1430.500	5	33	13	6	8011578937423
1430.600	6	33	13	6	8011578937447

Zorro Tecnologie srl

1432 CHIAVE A BUSSOLA 1/4" - phillips
SOCKET 1/4" - phillips

1/4"

1432.100	PH 1	33	13	6	8011578937461
1432.200	PH 2	33	14	6	8011578937485
1432.300	PH 3	33	14	6	8011578937508

1436 CHIAVE A BUSSOLA 1/4" - esagonale maschio
SOCKET 1/4" - hexagon male

1/4"

1436.030	3	33	13	6	8011578937584
1436.040	4	33	13	6	8011578937607
1436.050	5	33	14	6	8011578937621
1436.060	6	33	15	6	8011578937645
1436.080	8	33	17	6	8011578937669

1434 CHIAVE A BUSSOLA 1/4" - pozidriv
SOCKET 1/4" - pozidriv

1/4"

1434.100	PZ 1	33	13	6	8011578937522
1434.200	PZ 2	33	14	6	8011578937546
1434.300	PZ 3	33	14	6	8011578937560

1438 CHIAVE A BUSSOLA 1/4" - torx con foro
SOCKET 1/4" - torx with hole

1/4"

1438.080	TX 8	33	12	6	8011578937683
1438.100	TX 10	33	13	6	8011578937706
1438.150	TX 15	33	13	6	8011578937720
1438.200	TX 20	33	14	6	8011578937744
1438.250	TX 25	33	14	6	8011578937768
1438.270	TX 27	33	13	6	8011578937782
1438.300	TX 30	33	14	6	8011578937805
1438.400	TX 40	33	14	6	8011578937829

1440 CASSETTA 33 BUSSOLE 1/4" - mm 4 ÷ 13 - metallo
METAL BOX 33 SOCKETS 1/4" mm 4 ÷ 13 - metal

1/4"

Contenuto - content:

1400.040	4	1400.110	11	1430.300	3	1436.050	5
1400.045	4,5	1400.120	12	1430.400	4	1436.060	6
1400.050	5	1400.130	13	1430.500	5	1436.080	8
1400.055	5,5	1405.010	140	1430.600	6	0355.015	1,5
1400.060	6	1408.075	75	1430.700	7	0355.020	2
1400.070	7	1408.150	150	1432.100	1	0355.030	3
1400.080	8	1410.010	115	1432.200	2		
1400.090	9	1412.010		1436.030	3		
1400.100	10	1414.010		1436.040	4		

1440.010	245 x 120 x 40	1200	8011578960520

1442 VALIGETTA 46 BUSSOLE 1/4" - plastica
BLOW CASE 46 SOCKETS 1/4" - plastic

1/4"

Contenuto-content:

1400.040	1400.120	1436.030	1432.200	1438.400
1400.045	1400.130	1436.040	1432.300	0345.012
1400.050	1400.140	1436.050	1434.100	0345.015
1400.055	1406.010	1436.060	1434.200	0345.020
1400.060	1408.050	1436.070	1434.300	0345.025
1400.070	1408.100	1436.080	1438.100	0241.014
1400.080	1414.010	1430.400	1438.150	
1400.090	1410.010	1430.500	1438.200	
1400.100	1412.010	1430.600	1438.250	
1400.110	1408.910	1432.100	1438.300	

1442.010	235 x 170 x 50	1318	8011578002107

Zoom Tecnologie Srl

1450 CHIAVE A BUSSOLA 3/8" BOCCA ESAGONALE FLANK DRIVE - acciaio chrom-vanadium finitura cromata

SOCKET 3/8" HEXAGON FLANK DRIVE SECTION - chrom-vanadium steel chrome plated finish

3/8"

DIN 3124 ISO 2725

1450.060	6	25	9,8	17	20	6	8011578929718
1450.070	7	25	10,8	17	20	6	8011578929749
1450.080	8	25	12,3	17	20	6	8011578929770
1450.090	9	25	13,5	17	23	6	8011578929800
1450.100	10	25	14,5	17	23	6	8011578929831
1450.110	11	25	15,5	17	25	6	8011578929862
1450.120	12	25	16,0	17	24	6	8011578929893
1450.130	13	25	18,0	17	26	6	8011578929923
1450.140	14	28	19,8	18	31	6	8011578929954
1450.150	15	28	21,8	18	40	6	8011578929985
1450.160	16	28	21,8	20	36	6	8011578930011
1450.170	17	30	23,8	20	48	6	8011578930042
1450.180	18	30	25,0	21	62	6	8011578930073
1450.190	19	30	26,0	21	56	6	8011578930103
1450.200	20	30	27,8	23	65	6	8011578930134
1450.210	21	32	27,8	23	65	6	8011578930165
1450.220	22	32	29,8	26	81	6	8011578930196

1455 CRICCHETTO REVERSIBILE 3/8" CON SGANCIO RAPIDO - acciaio chrom-vanadium finitura cromata - impugnatura plastica

RATCHET 3/8" REVERSIBLE QUICK RELEASE - chrom-vanadium steel chrome plated finish - plastic handle

72 denti - teeth

3/8"

DIN 3122 ISO 3315

1455.010	196	31 x 31,2	82	250	2	8011578930226

1458 PROLUNGA 3/8" - acciaio chrom-vanadium finitura cromata

EXTENSION BAR 3/8" - chrom-vanadium steel chrome plated finish

3/8"

DIN 3123 ISO 3316

1458.075	75	76	6	8011578930257
1458.150	150	138	6	8011578930288

1460 LEVA A "T" 3/8" - acciaio chrom-vanadium finitura cromata

SLIDING "T" BAR 3/8" - chrom-vanadium steel chrome plated finish

3/8"

DIN 3122 ISO 3315

1460.010	165	154	6	8011578930318

1462 SNODO CARDANICO 3/8" - acciaio chrom-vanadium finitura cromata

UNIVERSAL JOINT 3/8" - chrom-vanadium steel chrome plated finish

3/8"

DIN 3123 ISO 3316

1462.010	57	69	6	8011578930349

Zorzi Tecnologie Srl

1470

ADATTATORE 3/8" PORTAINSERTI UNIVERSALE ESAGONO 1/4" (giraviti-esagoni-torx) - acc. chrom-vanadium fin. cromata
ADAPTER COUPLER 3/8" FOR HEXAGON BIT 1/4" (screwdriver-hexagon-torx) - chrom-vanadium steel chrome plated finish

3/8"

	L			
1470.010	29	24	**6**	8011578930370

1475

RACCORDO DA 3/8" FEMMINA A MASCHIO - acciaio chrom-vanadium finitura cromata
ADAPTER FROM 3/8" FEMALE TO MALE - chrom-vanadium steel chrome plated finish

3/8"

DIN 3123 ISO 3316

	L				
1475.010	1/4" Maschio-Male	riduttore/reduction	31	**6**	8011578930400
1475.020	1/2" Maschio-Male	aumento/increase	51	**6**	8011578930431

1477

CHIAVE A BUSSOLA 3/8" PER CANDELE BOCCA ESAGONALE PROFILO FLANK DRIVE - acc. chrom-vanadium fin. cromata
SOCKET 3/8" FOR SPARK PLUNG HEXAGON FLANK DRIVE SECTION - chrom-vanadium steel chrome plated finish

3/8"

1477.160	16	65	22	96	**6**	8011578930462
1477.210	21	65	28	143	**6**	8011578930493

1490

CASSETTA 22 BUSSOLE E ACCESSORI 3/8" - metallo
METAL BOX 22 SOCKETS AND ACCESSORIES 3/8" - metal

3/8"

Contenuto-content:
1450.060 6
1450.070 7
1450.080 8
1450.090 9
1450.100 10
1450.110 11
1450.120 12
1450.130 13
1450.140 14
1450.150 15
1450.160 16
1450.170 17
1450.180 18
1450.190 19
1450.220 22
1455.010
1458.075
1458.150
1460.010
1462.010
1477.160
1477.210

	L		
1490.010	320 x 150 x 50	2300	8011578960544

Zoppo Tecnologie Srl

1500

CHIAVE A BUSSOLA 1/2" BOCCA ESAGONALE PROFILO FLANK DRIVE - acciaio chrom-vanadium finitura cromata
SOCKET 1/2" HEXAGON FLANK DRIVE SECTION - chrom-vanadium steel chrome plated finish

DIN 3124 ISO 2725

1/2"

1500.080	**8**	38	13,0	22	48	**6**	8011578942786
1500.090	**9**	38	14,0	22	48	**6**	8011578942809
1500.100	**10**	38	15,0	22	48	**6**	8011578930585
1500.110	**11**	38	16,8	22	50	**6**	8011578930615
1500.120	**12**	38	17,9	22	52	**6**	8011578930646
1500.130	**13**	38	18,7	22	52	**6**	8011578930677
1500.140	**14**	38	20,0	22	55	**6**	8011578930707
1500.150	**15**	38	21,8	21	56	**6**	8011578930738
1500.160	**16**	38	22,0	21	49	**6**	8011578930769
1500.170	**17**	38	23,0	22	63	**6**	8011578930790
1500.180	**18**	38	25,8	24	76	**6**	8011578930820
1500.190	**19**	38	25,8	24	67	**6**	8011578930851
1500.200	**20**	38	27,8	26	87	**6**	8011578930882
1500.210	**21**	38	29,3	26	82	**6**	8011578930912
1500.220	**22**	38	30,0	28	96	**6**	8011578930943
1500.230	**23**	38	31,7	29	113	**6**	8011578930974
1500.240	**24**	38	32,0	29	105	**6**	8011578931001
1500.250	**25**	42	34,0	31	138	**6**	8011578931032
1500.260	**26**	42	35,0	33	133	**6**	8011578931063
1500.270	**27**	42	36,0	31	150	**6**	8011578931094
1500.280	**28**	42	38,0	34	176	**6**	8011578931124
1500.300	**30**	42	38,0	34	188	**6**	8011578931155
1500.320	**32**	42	42,0	38	210	**6**	8011578931186

1500Z

SERIE 10 CHIAVI A BUSSOLA 1/2" - binario
SET 10 SOCKETS 1/2" - holding bar

Contenuto-content:
1500.080 1500.100 1500.120 1500.150 1500.190
1500.090 1500.110 1500.130 1500.170 1500.220

1/2"

1500.910	606	8011578944902

1500ZZ

BINARIO PER BUSSOLE 1/2" - mm 260 - vuoto
HOL. BAR FOR SOCKETS 1/2" - mm 260 - empty

1/2"

1500.990	260	48	8011578944889

1501

CHIAVE A BUSSOLA 1/2" BOCCA POLIGONALE - acciaio chrom-vanadium finitura cromata
SOCKET 1/2" BIHEXAGONAL - chrom-vanadium steel chrome plated finish

DIN 3124 ISO 2725

1/2"

1501.080	**8**	38	13,0	22	48	**6**	8011578964948
1501.090	**9**	38	14,0	22	48	**6**	8011578964962
1501.100	**10**	38	15,0	22	48	**6**	8011578964986
1501.110	**11**	38	16,8	22	50	**6**	8011578965006
1501.120	**12**	38	17,9	22	52	**6**	8011578965020
1501.130	**13**	38	18,7	22	52	**6**	8011578965044
1501.140	**14**	38	20,0	22	55	**6**	8011578965068
1501.150	**15**	38	21,8	21	56	**6**	8011578965082
1501.160	**16**	38	22,0	21	49	**6**	8011578965105
1501.170	**17**	38	23,0	22	63	**6**	8011578965129
1501.180	**18**	38	25,8	24	76	**6**	8011578965143
1501.190	**19**	38	25,8	24	67	**6**	8011578965167
1501.200	**20**	38	25,8	24	67	**6**	8011578975586
1501.210	**21**	38	29,3	26	82	**6**	8011578965181
1501.220	**22**	38	30,0	28	96	**6**	8011578965204
1501.240	**24**	38	32,0	29	105	**6**	8011578965228
1501.270	**27**	42	36,0	31	150	**6**	8011578965242
1501.300	**30**	42	38,0	34	188	**6**	8011578965266
1501.320	**32**	42	42,0	38	210	**6**	8011578965280

new

POLIGONALE
BIHEXAGONAL

Zorzo Tecnologie srl

1501Z

SERIE 10 CHIAVI A BUSSOLA POLIGONALI 1/2" - binario
SET 10 POLIGONAL SOCKETS 1/2" - holding bar

1/2"

Contenuto-content:

1501.080	1501.100	1501.120	1501.150	1501.190
1501.090	1501.110	1501.130	1501.170	1501.220

1501.910	606	8011578965303

1502

CHIAVE A BUSSOLA 1/2" LUNGA
SOCKET 1/2" DEEP

1502.100	**10**	77	22	16	84	**6**	8011578940140
1502.110	**11**	77	22	16	90	**6**	8011578940164
1502.120	**12**	77	22	18	98	**6**	8011578940188
1502.130	**13**	77	22	19	107	**6**	8011578940201
1502.140	**14**	77	22	21	110	**6**	8011578940225
1502.150	**15**	77	22	22	120	**6**	8011578940249
1502.160	**16**	77	22	22	109	**6**	8011578940263
1502.170	**17**	77	24	24	142	**6**	8011578960506
1502.180	**18**	77	26	26	178	**6**	8011578940300
1502.190	**19**	77	26	26	163	**6**	8011578940324
1502.210	**21**	77	28	28	187	**6**	8011578940362
1502.220	**22**	77	30	30	227	**6**	8011578940386
1502.240	**24**	77	32	32	253	**6**	8011578940409
1502.270	**27**	77	36	36	340	**6**	8011578940423
1502.300	**30**	77	40	40	425	**6**	8011578940447
1502.320	**32**	77	42	42	452	**6**	8011578940461

1/2"

1502Z

SERIE 10 CHIAVI A BUS. LUNGHE 1/2" - binario
SET 10 SOCKETS 1/2" LONG - holding bar

1/2"

Contenuto-content:

1502.100	1502.120	1502.140	1502.170	1502.220
1502.110	1502.130	1502.150	1502.190	1502.240

1502.910	1426	8011578944926

1504

CHIAVE A BUSSOLA 1/2" BOCCA POLIGONALE in POLLICI - acciaio chrom-vanadium finitura cromata
SOCKET 1/2" POLIGONAL in INCH - chrom-vanadium steel chrome plated finish

DIN 3124 ISO 2725

1504.010	**3/8"**	38	48	**6**	8011578962166
1504.020	**7/16"**	38	48	**6**	8011578962180
1504.030	**1/2"**	38	54	**6**	8011578962203
1504.040	**9/16"**	38	52	**6**	8011578962227
1504.050	**5/8"**	38	48	**6**	8011578962241
1504.060	**19/32"**	38	52	**6**	8011578962265
1504.070	**11/16"**	38	60	**6**	8011578962289
1504.080	**3/4"**	38	64	**6**	8011578962302
1504.090	**25/32"**	38	76	**6**	8011578962326
1504.100	**13/16"**	38	78	**6**	8011578962340
1504.110	**7/8"**	38	90	**6**	8011578962364
1504.120	**15/16"**	38	104	**6**	8011578962388
1504.130	**1"**	42	132	**6**	8011578962401
1504.140	**1.1/16"**	42	130	**6**	8011578962425
1504.150	**1.1/8"**	42	156	**6**	8011578962449
1504.160	**1.3/16"**	42	184	**6**	8011578962463
1504.170	**1.1/4"**	42	202	**6**	8011578962487

1/2" **POLLICI** INCH

Zeta Tecnologie Srl

1504Z

SERIE 17 CHIAVI A BUSSOLA 1/2" in POLLICI - binario
SET 17 SOCKETS 1/2" in INCH - holding bar

1/2"

POLLICI
INCH

Contenuto-content:

1504.010	1504.020	1504.030	1504.040	1504.050
1504.060	1504.070	1504.080	1504.090	1504.100
1504.110	1504.120	1504.130	1504.140	1504.150
1504.160	1504.170			

1504.910	1656	8011578962500

1505

CRICCHETTO REVERSIBILE 1/2" CON SGANCIO RAPIDO - acciaio chrom-vanadium finitura cromata - impugnatura plastica
RATCHET 1/2" REVERSIBLE QUICK RELEASE - chrom-vanadium steel chrome plated finish - plastic handle

72 denti - teeth

1/2"

DIN 3122 ISO 3315

	L					
1505.010	254	41,5 x 39	96	563	**2**	8011578931216

1505Z

CRICCHETTO REVERSIBILE 1/2" TELESCOPICO - SNODATO - acciaio chrom-vanadium finitura cromata
RATCHET 1/2" REVERSIBLE TELESCOPIC - FLEX - chrom-vanadium steel chrome plated finish

72 denti - teeth

1/2"

	L					
1505.910	340/480	43 x 42	110	1160	**2**	8011578967543

1506

CRICCHETTO REVERSIBILE 1/2" - sgancio rapido
RATCHET 1/2" REVERSIBLE - quick release

72 denti - teeth

1/2"

	L					
1506.010	254	38 x 43	105	560	**2**	8011578940102

1508

PROLUNGA 1/2" - acciaio chrom-vanadium finitura cromata
EXTENSION BAR 1/2" - chrom-vanadium steel chrome plated finish

1/2"

DIN 3123 ISO 3316

	L		
1508.125	125	197	**6**	8011578931247
1508.250	250	388	**6**	8011578931278

Zorzo Tecnologie srl

1509

PROLUNGA 1/2" ESTREMITÀ SFERICA INCLINABILE - acciaio chrom-vanadium finitura cromata
EXTENSION BAR 1/2" WOBBLE SPHERIC - chrom-vanadium steel chrome plated finish

1/2"

	L			
1509.125	125	215	6	8011578931308
1509.250	250	417	6	8011578931339

1510

LEVA A "T" 1/2" - acciaio chrom-vanadium finitura cromata
SLIDING "T" BAR 1/2" - chrom-vanadium steel chrome plated finish

1/2"

DIN 3122 ISO 3315

	L			
1510.010	250	360	6	8011578931360

1512

SNODO CARDANICO 1/2" - acciaio chrom-vanadium finitura cromata
UNIVERSAL JOINT 1/2" - chrom-vanadium steel chrome plated finish

1/2"

DIN 3123 ISO 3316

	L			
1512.010	70	137	6	8011578931391

1520

ADATTATORE 1/2" PORTAINSERTI UNIVERSALE ESAGONO 1/4" (giraviti-esagoni-torx) - acc. chrom-vanadium fin. cromata
ADAPTER COUPLER 1/2" FOR HEXAGON BIT 1/4" (screwdriver-hexagon-torx) - chrom-vanadium steel chrome plated finish

1/2"

1520.010		52	6	8011578949563

1525

RACCORDO DA 1/2" FEMMINA - MASCHIO - acciaio chrom-vanadium finitura cromata
ADAPTER FROM 1/2" FEMALE - MALE - chrom-vanadium steel chrome plated finish

1/2"

DIN 3123 ISO 3316

	L					
1525.010	3/8" Maschio-Male	riduttore/reduction	50	6	8011578931421
1525.015	3/4" Maschio-Male	aumento/increase	142	6	8011578943004

1527

CHIAVE A BUSSOLA 1/2" PER CANDELE BOCCA ESAGONALE PROFILO FLANK DRIVE - acc. chrom-vanadium fin. cromata
SOCKET 1/2" FOR SPARK PLUNG HEXAGON FLANK DRIVE SECTION - chrom-vanadium steel chrome plated finish

1/2"

1527.160	16	65	22	94	6	8011578931452
1527.210	21	65	28	141	6	8011578931483

Zorzi Tecnologie Srl

1530 CHIAVE A BUSSOLA 1/2" - esagonale maschio
SOCKET 1/2" - hexagon male

1/2"

1530.040	4	55	81	6	8011578937843
1530.050	5	55	85	6	8011578937867
1530.060	6	55	79	6	8011578937881
1530.080	8	55	87	6	8011578937904
1530.100	10	55	91	6	8011578937928
1530.120	12	55	101	6	8011578937942
1530.140	14	55	114	6	8011578937966
1530.170	17	55	149	6	8011578937980
1530.190	19	55	157	6	8011578938000

1530Z SERIE 9 BUSSOLE ESAGONO 1/2" - binario
SET 9 SOCKETS HEX. 1/2" - holding bar

1/2"

Contenuto-content:
1530.040 1530.060 1530.100 1530.140 1530.190
1530.050 1530.080 1530.120 1530.170

1530.909	970	8011578944940

1531 CHIAVE A BUSS. 1/2" ESAG. MASCHIO - lunga
SOCKET 1/2" HEX MALE - deep

1/2"

1531.050	5	90	108	6	8011578941086
1531.060	6	90	110	6	8011578941109
1531.080	8	90	113	6	8011578941123
1531.100	10	90	114	6	8011578941147

1531A CHIAVE A BUSSOLA 1/2" ESAGONO
SOCKET 1/2" HEXAGON

1/2"

1531.205	5	140	141	6	8011578944964
1531.206	6	140	141	6	8011578944988
1531.208	8	140	144	6	8011578945008
1531.210	10	140	147	6	8011578945022

1532 CHIAVE A BUSSOLA 1/2" ESAGONO SFERICO
SOCKET 1/2" HEXAGON BALL POINT

1/2"

1532.050	5	90	107	6	8011578945046
1532.060	6	90	108	6	8011578945060
1532.080	8	90	111	6	8011578945084

1532Z SERIE 10 BUSS. ESAG. LUNGHE 1/2" - binario
SET 10 SOCKETS HEX. DEEP 1/2" - holding bar

1/2"

Contenuto-content:
1531.050 1531.080 1531.206 1531.210 1532.060
1531.060 1531.205 1531.208 1532.050 1532.080

1532.990	1260	8011578945107

Nozzo Tecnologie Srl

1534 CHIAVE A BUSSOLA 1/2" - torx
SOCKET 1/2" - torx

1/2"

1534.200	**TX 20**	56	81	**6**	8011578938024
1534.250	**TX 25**	56	82	**6**	8011578938048
1534.270	**TX 27**	56	82	**6**	8011578938062
1534.300	**TX 30**	56	82	**6**	8011578938086
1534.400	**TX 40**	56	68	**6**	8011578938109
1534.450	**TX 45**	56	84	**6**	8011578938123
1534.500	**TX 50**	56	84	**6**	8011578938147

1534T CHIAVE A BUSSOLA 1/2" TX
SOCKET 1/2" TORX

1/2"

1534.840	**TX 40**	90	109	**6**	8011578945145
1534.845	**TX 45**	90	110	**6**	8011578945169
1534.850	**TX 50**	90	110	**6**	8011578945183
1534.855	**TX 55**	90	112	**6**	8011578945206
1534.860	**TX 60**	90	131	**6**	8011578945220
1534.870	**TX 70**	90	152	**6**	8011578945244

1534A SERIE 7 BUS. TX 1/2" - binario
SET 7 SOCK. TORX 1/2" - hold. bar

1/2"

Contenuto-content:

1534.200	1534.270	1534.400	1534.500
1534.250	1534.300	1534.450	

1534.797	496	8011578945121

1534Z CHIAVE A BUSSOLA 1/2" TX
SOCKET 1/2" TORX

1/2"

1534.940	**TX 40**	140	142	**6**	8011578945268
1534.945	**TX 45**	140	142	**6**	8011578945282
1534.950	**TX 50**	140	143	**6**	8011578945305
1534.955	**TX 55**	140	145	**6**	8011578945329

1534TZ SERIE 10 BUSSOLE TORX LUNGHE 1/2" - binario
SET 10 TORX SOCKETS - DEEP 1/2" - holding bar

1/2"

Contenuto-content:

1534.840	1534.850	1534.860	1534.940	1534.950
1534.845	1534.855	1534.870	1534.945	1534.955

1534.990	1328	8011578945343

1535 CHIAVE A BUSSOLA 1/2" TORX E FEMMINA
SOCKET 1/2" TORX AND FEMALE

1/2"

1535.100	**E 10**	38	13,5	22	50	**6**	8011578940942
1535.120	**E 12**	38	15,0	22	50	**6**	8011578940966
1535.140	**E 14**	38	17,0	22	52	**6**	8011578940980
1535.160	**E 16**	38	19,0	22	57	**6**	8011578941000
1535.180	**E 18**	38	20,0	22	57	**6**	8011578941024
1535.200	**E 20**	38	22,0	24	72	**6**	8011578941048
1535.240	**E 24**	38	24,0	28	98	**6**	8011578941062

Zorn Technologie Srl

1535Z SERIE 7 CHIAVI A BUS. TORX 1/2" - binario
SET 7 TORX SOCKETS 1/2" - holding bar

1/2"

Contenuto-content:

1535.100	1535.140	1535.180	1535.240
1535.120	1535.160	1535.200	

1535.907	472	8011578945367

1538 CHIAVE A BUSSOLA 1/2" RIBE
SOCKET 1/2" RIBE

1/2"

		L			
1538.060	**6**	55	84	**6**	8011578945503
1538.070	**7**	55	85	**6**	8011578945527
1538.080	**8**	55	85	**6**	8011578945541
1538.100	**10**	55	88	**6**	8011578945565
1538.120	**12**	55	98	**6**	8011578945589

1537 CHIAVE A BUSSOLA 1/2" XZN SPLINE
SOCKET 1/2" XZN SPLINE

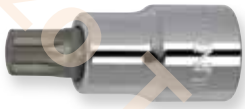

1/2"

		L			
1537.040	**M 4**	55	83	**6**	8011578945381
1537.050	**M 5**	55	84	**6**	8011578945404
1537.060	**M 6**	55	85	**6**	8011578945428
1537.080	**M 8**	55	86	**6**	8011578945442
1537.100	**M 10**	55	88	**6**	8011578945466
1537.120	**M 12**	55	98	**6**	8011578945480

1538Z SERIE 10 BUSSOLE XZN RIBE 1/2" - binario
SET 10 XZN RIBE SOCKETS 1/2" - holding bar

1/2"

Contenuto-content:

1537.040	1537.060	1537.100	1538.060	1538.080
1537.050	1537.080	1537.120	1538.070	1538.100

1538.797	895	8011578945602

1542 SERIE 12 CHIAVI A BUSSOLA 1/2" + CRICCHETTO + PROLUNGA
SET 12 SOCKETS 1/2" + RATCHET + EXTENSION

Contenuto - content:
1500.100
1500.110
1500.120
1500.130
1500.140
1500.150
1500.170
1500.190
1500.220
1500.240
1506.010
1508.125

	Pz.		
1542.010	12	1580	8011578963163

Forzo Tecnologie Srl

1545 CASSETTA 25 BUSSOLE E ACCESSORI 1/2" - metallo
METAL BOX 25 SOCKETS AND ACCESSORIES 1/2" - metal

1/2"

Contenuto - content:
1500.080 mm 8
1500.090 mm 9
1500.100 mm 10
1500.110 mm 11
1500.120 mm 12
1500.130 mm 13
1500.140 mm 14
1500.150 mm 15
1500.160 mm 16
1500.170 mm 17
1500.180 mm 18
1500.190 mm 19
1500.210 mm 21
1500.220 mm 22
1500.240 mm 24
1500.270 mm 27
1500.300 mm 30
1500.320 mm 32
1505.010 254
1508.125 125
1508.250 250
1510.010 250
1512.010
1527.160 mm 16
1527.210 mm 21

	L			
1545.010	355 x 190 x 50		5100	8011578003722
1545.810	355 x 190 x 50	poligonali-bihex	5100	8011578970543
1545.910	355 x 190 x 50	pollici-inch	5100	8011578970482

1548 VALIGETTA 22 BUSSOLE E ACCESSORI 1/2" - plastica
BLOW CASE 22 SOCKETS AND ACCESSORIES 1/2" - plastic

1/2"

Contenuto-content:
1500.100 mm 10
1500.110 mm 11
1500.120 mm 12
1500.130 mm 13
1500.140 mm 14
1500.150 mm 15
1500.160 mm 16
1500.170 mm 17
1500.180 mm 18
1500.190 mm 19
1500.220 mm 22
1500.240 mm 24
1500.270 mm 27
1500.300 mm 30
1500.320 mm 32
1506.010
1508.125
1508.250
1512.010
1510.910
1527.160 mm 16
1527.210 mm 21

	L		
1548.010	320 x 290 x 70	3800	8011578003746

Zorzo Tecnologie Srl

1555 VALIGETTA 94 BUSSOLE E ACCESSORI 1/4" - 1/2" - plastica
BLOW CASE 94 SOCKETS AND ACCESSORIES 1/4" - 1/2" - plastic

1/4" 1/2"

Contenuto - content:

1400.040	1436.030	1500.200	0251.400
1400.045	1436.040	1500.210	0253.400
1400.050	1436.050	1500.220	0253.450
1400.055	1436.060	1500.230	0253.500
1400.060	1430.400	1500.240	0253.550
1400.070	1430.550	1500.270	0345.015
1400.080	1430.600	1500.300	0345.020
1400.090	1430.700	1500.320	0345.025
1400.100	1432.100	1502.140	1527.160
1400.110	1432.200	1502.150	1527.210
1400.120	1434.100	1502.170	
1400.130	1434.200	1502.190	
1400.140	1438.080	1505.010	
1402.060	1438.100	1508.125	
1402.070	1438.150	1508.250	
1402.080	1438.200	1512.010	
1402.090	1438.250	1510.010	
1402.100	1438.300	1520.010	
1402.110	1500.100	0263.080	
1402.120	1500.110	0263.100	
1402.130	1500.120	0263.120	
1405.010	1500.130	0263.140	
1408.075	1500.140	0249.080	
1408.150	1500.150	0249.100	
1408.000	1500.160	0249.120	
1414.010	1500.170	0250.300	
1410.010	1500.180	0250.400	
1412.010	1500.190	0251.300	

	L		
1555.010	380 x 320 x 80	5650	8011578003807

1557 VALIGETTA 88 BUSSOLE - CHIAVI COMBINATE - CHIAVI MASCHIO - plastica
BLOW CASE 88 SOCKETS - COMBINATION WRENCHES - HEX KEYS - plastic

1/4" 1/2"

Contenuto - content:

0350.020	1400.120	1500.140	0251.400
0350.025	1400.130	1500.150	0253.400
0350.030	1400.140	1500.160	0253.450
0350.040	1405.010	1500.170	0253.500
0350.050	1408.075	1500.180	0253.550
0350.060	1408.150	1500.190	1527.160
1030.080	1408.000	1500.200	1527.210
1030.100	1414.010	1500.220	
1030.110	1410.010	1500.240	
1030.120	1412.010	1500.270	
1030.130	1436.300	1500.300	
1030.140	1436.400	1500.320	
1030.150	1436.500	1505.010	
1030.170	1436.600	1508.125	
1030.190	1430.400	1508.250	
1030.220	1430.500	1512.010	
1520.010	1430.600	1510.010	
1400.040	1432.100	0263.080	
1400.045	1432.200	0263.100	
1400.050	1434.100	0263.120	
1400.055	1434.200	0263.140	
1400.060	1438.080	0249.080	
1400.070	1438.100	0249.100	
1400.080	1438.150	0249.120	
1400.090	1438.200	0250.300	
1400.100	1438.250	0250.400	
1400.110	1438.300	0251.300	

	L		
1557.010	380 x 320 x 80	6150	8011578966003

Zorzo Tecnologie Srl

1560 VALIGETTA 56 UTENSILI VARI: CHIAVI - CACCIAVITI - PINZE - BUSSOLE - plastica
BLOW CASE 56 TOOLS: WRENCHES - SCREWDRIVERS - PLIERS - SOCKETS - plastic

1/4" 1/2"

Contenuto - content:

0170.610	0253.200
0170.503	0253.250
0172.610	0253.270
0172.615	0253.300
0172.103	0253.400
0377.040	1400.080
0440.018	1400.090
0490.024	1400.100
1030.080	1400.110
1030.100	1400.120
1030.120	1400.130
1030.130	1420.010
1030.150	1414.010
1030.170	1500.100
0345.015	1500.110
0345.020	1500.120
0345.025	1500.130
0345.030	1500.150
0345.040	1500.170
0250.100	1500.190
0250.200	1500.220
0250.300	1500.240
0249.300	1500.270
0249.400	1505.010
0249.500	1508.125
0249.600	1512.010
0253.100	1527.160
0253.150	1527.210

	L		
1560.010	380 x 320 x 80	5300	8011578965822

1565 VALIGETTA 30 BUSSOLE 1/2" ESAGONO MASCHIO
BLOW CASE 30 SOCKETS 1/2" HEX MALE

Contenuto - content:
1530: esagono - hex mm 5 - 6 - 7 - 8 - 10 - 12 - 14 - 19 lunghezza - lenght mm 55
1531: esagono - hex mm 5 - 6 - 7 - 8 - 9 - 10 - 12 - 13 lunghezza - lenght mm 100
1531A: esagono - hex mm 5 - 6 - 7 - 8 - 10 - 12 - 14 lunghezza - lenght mm 140
1531A: esagono - hex mm 5 - 6 - 7 - 8 - 10 - 12 lunghezza - lenght mm 200

1565.010	4870	8011578972462	new

Zorzo Tecnologie Srl

1570 ESPOSITORE 180 CHIAVI BUSSOLA E ACCESSORI 1/4" - 3/8" - 1/2" - metallo
DISPLAY 180 SOCKETS AND ACCESSORIES 1/4" - 3/8" - 1/2" - metal

1/4" 3/8" 1/2"

Contenuto - content:

1400.040	4	Nr. 3	1450.120	12	Nr. 3	1500.150	15	Nr. 2
1400.045	4,5	Nr. 3	1450.130	13	Nr. 3	1500.160	16	Nr. 2
1400.050	5	Nr. 3	1450.140	14	Nr. 2	1500.170	17	Nr. 2
1400.055	5,5	Nr. 3	1450.150	15	Nr. 2	1500.180	18	Nr. 2
1400.060	6	Nr. 3	1450.160	16	Nr. 2	1500.190	19	Nr. 2
1400.070	7	Nr. 3	1450.170	17	Nr. 2	1500.200	20	Nr. 2
1400.080	8	Nr. 3	1450.180	18	Nr. 2	1500.210	21	Nr. 2
1400.090	9	Nr. 3	1450.190	19	Nr. 2	1500.220	22	Nr. 2
1400.100	10	Nr. 3	1450.200	20	Nr. 2	1500.230	23	Nr. 2
1400.110	11	Nr. 3	1450.210	21	Nr. 2	1500.240	24	Nr. 2
1400.120	12	Nr. 3	1450.220	22	Nr. 2	1500.250	25	Nr. 2
1400.130	13	Nr. 3	1455.010		Nr. 2	1500.260	26	Nr. 2
1405.010		Nr. 2	1458.075		Nr. 2	1500.270	27	Nr. 2
1408.075		Nr. 2	1458.150		Nr. 2	1500.280	28	Nr. 2
1408.150		Nr. 2	1460.010		Nr. 2	1500.300	30	Nr. 2
1410.010		Nr. 2	1462.010		Nr. 2	1500.320	32	Nr. 2
1412.010		Nr. 2	1470.010		Nr. 2	1505.010		Nr. 2
1414.010		Nr. 2	1475.010		Nr. 2	1508.125		Nr. 2
1420.010		Nr. 2	1475.020		Nr. 2	1508.250		Nr. 2
1425.010		Nr. 2	1477.160		Nr. 2	1509.125		Nr. 2
1450.060	6	Nr. 3	1477.210		Nr. 2	1509.250		Nr. 2
1450.070	7	Nr. 3	1500.100	10	Nr. 3	1510.010		Nr. 2
1450.080	8	Nr. 3	1500.110	11	Nr. 3	1512.010		Nr. 2
1450.090	9	Nr. 3	1500.120	12	Nr. 3	1525.010		Nr. 2
1450.100	10	Nr. 3	1500.130	13	Nr. 3	1527.160		Nr. 2
1450.110	11	Nr. 3	1500.140	14	Nr. 2	1527.210		Nr. 2

1570.010	400 x 600	14500	8011578931605
1570.210	vuoto - empty	5000	8011578003753

1600 CHIAVE A BUSSOLA 3/4"
SOCKET 3/4"

3/4"

1600.220	**22**	51	32	36	212	**2**	8011578938161
1600.230	**23**	51	32	36	216	**2**	8011578938185
1600.240	**24**	50	34	36	218	**2**	8011578938208
1600.260	**26**	53	36	38	262	**2**	8011578938222
1600.270	**27**	53	36	38	224	**2**	8011578938246
1600.280	**28**	53	38	40	265	**2**	8011578938260
1600.300	**30**	54	38	42	282	**2**	8011578938284
1600.320	**32**	56	38	44	300	**2**	8011578938307
1600.330	**33**	56	38	46	333	**2**	8011578938321
1600.340	**34**	56	38	46	316	**2**	8011578938345
1600.360	**36**	58	42	50	424	**2**	8011578938369
1600.380	**38**	58	42	50	500	**2**	8011578938383
1600.410	**41**	64	45	56	574	**2**	8011578938406
1600.460	**46**	71	48	62	702	**2**	8011578938420
1600.500	**50**	73	48	68	794	**2**	8011578938444
1600.550	**55**	72	48	68	918	**2**	8011578938468
1600.600	**60**	75	49	74	1125	**2**	8011578938482

1605 CRICCHETTO REVERSIBILE 3/4" - sgancio rapido
RATCHET 3/4" - REVERSIBLE - quick release

3/4"

1605.010	500	1936	**1**	8011578938505

Zona Tecnologie Srl

1608 PROLUNGA 3/4"
EXTENSION BAR 3/4"

3/4"

	L			
1608.100	100	800	2	8011578938529
1608.200	200	808	2	8011578938543
1608.400	400	1522	2	8011578938567

1610 LEVA A "T" 3/4"
SLIDING "T" BAR 3/4"

3/4"

	L			
1610.010	460	1328	2	8011578942762

1612 SNODO CARDANICO 3/4"
UNIVERSAL JOINT 3/4"

3/4"

	L			
1612.010	108	546	2	8011578938581

1625 ADATTATORE 3/4" F - 1/2" M
ADAPTERS 3/4" F - 1/2" M

3/4" 1/2"

1625.010	F 3/4"-M 1/2" riduttore/reduction	200	2	8011578938604

1640 CASSETTA 14 BUSSOLE 3/4" - mm 22 ÷ 50 - metallo
METAL BOX 14 SOCKETS 3/4" - mm 22 ÷ 50 - metal

3/4"

Contenuto-content:

1600.220	22	1600.320	32	1600.460	46	1608.100	100
1600.240	24	1600.360	36	1600.500	50	1608.200	200
1600.270	27	1600.380	38	1605.010			
1600.300	30	1600.410	41	1610.010			

	L		
1640.010	550 x 190 x 70	11900	8011578902216

1640 CASSETTA 21 BUSSOLE 3/4" - mm 19 ÷ 50
BLOW CASE 21 SOCKET 3/4 - mm 19 ÷ 50

3/4"

Contenuto-content:

1600.190	19	1600.360	36
1600.210	21	1600.380	38
1600.220	22	1600.410	41
1600.230	23	1600.460	46
1600.240	24	1600.500	50
1600.260	26	1608.100	100
1600.270	27	1608.200	200
1600.290	29	1608.400	400
1600.300	30	1605.010	
1600.320	32	1610.010	
1600.350	35		

1640.020	13600	8011578972462	new

Zorzi Tecnologie srl

1642 CHIAVE A BUSSOLA 1″
SOCKET 1″

1″

1642.360	36	65	46	51	504	1	8011578944568
1642.410	41	70	45	57	624	1	8011578944582
1642.460	46	75	50	65	922	1	8011578944605
1642.500	50	75	56	70	1100	1	8011578944629
1642.550	55	80	56	76	1354	1	8011578944643
1642.600	60	88	57	82	1512	1	8011578944667
1642.650	65	88	56	88	1730	1	8011578944681
1642.700	70	94	68	94	2212	1	8011578944704
1642.750	75	98	68	100	2534	1	8011578944728
1642.800	80	104	68	105	2734	1	8011578944742

1645 CRICCHETTO 1″
RATCHET 1″

1″

1645.010	665	4374	1	8011578944766

1646 LEVA A "T" 1″
SLIDING "T" BAR 1″

1″

1646.010	565	2754	1	8011578944780

1647 PROLUNGA 1″
EXTENSION BAR 1″

1″

1647.200	200	1310	1	8011578944803
1647.400	400	2250	1	8011578944827

1648 ADATTATORE 1″ F - 3/4″ M
ADAPTER 1″ F - 3/4″ M

1″ 3/4″

1648.010	F 1″-M 3/4″	riduttore/reduction	404	1	8011578944841

1649 CASSETTA 15 BUSSOLE E ACCESSORI 1″- metallo
METAL CASE 15 SOCKETS AND ACCES. 1″- metal

Contenuto-content:

1642.360	1642.750
1642.410	1642.800
1642.460	1645.010
1642.500	1646.010
1642.550	1647.200
1642.600	1647.400
1642.650	1648.010
1642.700	

1″

1649.010	660 x 205 x 100	31816	8011578944865

Zorzo Tecnologie Srl

1650 CHIAVE A BUSSOLA 1/2" MACCHINA IMPACT
SOCKET 1/2" - IMPACT

1/2"

1650.080	8	38	16	24	60	6	8011578949808
1650.100	10	38	16	24	60	6	8011578942120
1650.110	11	38	17	24	64	6	8011578942144
1650.120	12	38	19	24	64	6	8011578942168
1650.130	13	38	20	24	66	6	8011578942182
1650.140	14	38	22	24	68	6	8011578942205
1650.150	15	38	24	24	76	6	8011578942229
1650.160	16	38	24	24	74	6	8011578942243
1650.170	17	40	26	26	96	6	8011578942267
1650.180	18	40	28	28	117	6	8011578942281
1650.190	19	40	28	28	104	6	8011578942304
1650.210	21	40	28	30	110	6	8011578942328
1650.220	22	40	28	32	123	6	8011578942342
1650.240	24	42	28	34	134	6	8011578942366
1650.270	27	45	30	38	188	6	8011578942380
1650.300	30	46	30	42	205	6	8011578942403
1650.320	32	50	30	44	218	6	8011578942427

1652 CHIAVE A BUSSOLA 1/2" MACCHINA IMPACT LUNGHE
SOCKET 1/2" - DEEP IMPACT

1/2"

1652.100	10	78	16	24	124	2	8011578942441
1652.130	13	78	21	25	160	2	8011578942465
1652.140	14	78	22	24	154	2	8011578942489
1652.150	15	78	26	30	194	2	8011578948788
1652.170	17	78	22	24	194	2	8011578942502
1652.190	19	78	28	28	222	2	8011578942526
1652.210	21	78	28	32	265	2	8011578970024
1652.220	22	78	28	32	265	2	8011578942540
1652.240	24	78	28	34	290	2	8011578942564
1652.270	27	78	30	38	352	2	8011578942588

1652Z SERIE 8 BUSSOLE IMPACT LUNGHE 1/2" - binario
SET 8 SOCKETS - DEEP IMPACT 1/2" - holding bar

Contenuto-content:
1652.100 1652.170 1652.240
1652.130 1652.190 1652.270
1652.140 1652.220

1/2"

1652.908	1785	8011578945626

1653 PROLUNGA 1/2" MACCHINA IMPACT
EXTENSION 1/2" - IMPACT

1/2"

1653.012	125	232	2	8011578942823

1654 SNODO 1/2" MACCHINA IMPACT
UNIVERSAL JOIN 1/2" - IMPACT

1/2"

1654.010	65	164	2	8011578942847

Zeta Tecnologie srl

1655 SERIE 3 CHIAVI A BUSSOLA 1/2" LUNGHE MACCHINA
SET 3 SOCKET 1/2" - DEEP IMPACT

1/2"

1655.010	mm 17-19-21	840	1	8011578655006

1656 CHIAVI A BUSSOLA 1/2" LUNGHE MACCHINA CON PROTEZIONE PLASTICA PER RUOTE
SOCKET 1/2" - DEEP IMPACT

1/2"

1656.170	17	85	200	2	8011578971427	new
1656.190	19	85	200	2	8011578971441	new
1656.210	21	85	200	2	8011578971465	new

1658 SPINA
PIN

1658.010	20	1650 8÷13 - 1652 10÷13	2,5	1	8011578948801
1658.020	25	1650 14÷32 - 1652 14÷27	3	1	8011578948825

1659 ANELLO
RING

1659.010	20	2	1	8011578948849
1659.020	26	2	1	8011578948863

1664 CHIAVE A BUSSOLA 3/4" - MACCHINA IMPACT
SOCKET 3/4" - IMPACT

3/4"

1664.170	17	50	322	2	8011578965341
1664.190	19	50	332	2	8011578965365
1664.210	21	50	345	2	8011578965389
1664.220	22	50	355	2	8011578965402
1664.230	23	50	358	2	8011578965426
1664.240	24	50	355	2	8011578965440
1664.260	26	50	375	2	8011578965464
1664.270	27	50	350	2	8011578965488
1664.300	30	53	408	2	8011578965501
1664.320	32	53	434	2	8011578965525
1664.330	33	55	464	2	8011578965549
1664.360	36	55	490	2	8011578965563
1664.380	38	58	525	2	8011578965587
1664.410	41	58	580	2	8011578965600
1664.460	46	62	738	2	8011578965624

Zorzi Tecnologie Srl

1665 CHIAVE A BUSSOLA 3/4" - MACCHINA IMPACT LUNGHE
SOCKET 3/4" - DEEP IMPACT

3/4"

1665.170	17	90	510	2	8011578962548
1665.190	19	90	518	2	8011578962562
1665.220	22	90	566	2	8011578962586
1665.240	24	90	586	2	8011578962609
1665.270	27	90	648	2	8011578962623
1665.300	30	90	698	2	8011578962647
1665.320	32	90	768	2	8011578962661
1665.330	33	90	736	2	8011578962685
1665.360	36	90	746	2	8011578962708
1665.410	41	90	920	2	8011578962722
1665.460	46	90	998	2	8011578962746

1666 PROLUNGA 3/4" - MACCHINA IMPACT
EXTENSION 3/4" - IMPACT

3/4"

1666.010	100	586	2	8011578962760

1667 SNODO 3/4" - MACCHINA IMPACT
UNIVERSAL JOIN 3/4" - IMPACT

3/4"

1667.010	90	492	2	8011578962784

1668 RACCORDO DA 3/4" F - 1/2" M
ADAPTER FROM 3/4" F - 1/2" M

3/4" 1/2"

1668.010	58	324	2	8011578962807

1669 SPINA 3/4"
PIN 3/4"

1669.010	2,5	1	8011578962821

1669 ANELLO 3/4"
RING 3/4"

1669.050	2	1	8011578962845

Forzo Tecnologie Srl

1670 CHIAVE A BUSSOLA 1" - MACCHINA IMPACT
SOCKET 1" - IMPACT

1"

1670.360	36	63	692	1	8011578962869
1670.410	41	66	844	1	8011578962883
1670.460	46	70	1026	1	8011578962906
1670.500	50	70	1124	1	8011578962920
1670.550	55	83	1366	1	8011578962944
1670.600	60	86	1690	1	8011578962968
1670.650	65	85	1934	1	8011578962982

1671 PROLUNGA 1" - MACCHINA IMPACT
EXTENSION 1" - IMPACT

1"

1671.010	175	1414	1	8011578963002

1673 RACCORDO DA 1" F - 3/4" M
ADAPTER FROM 1" F - 3/4" M

1" 3/4"

1673.010	75	658	1	8011578963026

1674 SPINA 1"
PIN 1"

1674.010	2,5	1	8011578963088

1674 ANELLO 1"
RING 1"

1674.050	2	1	8011578963101

Forzo Tecnologie Srl

1700 CHIAVE DINAMOMETRICA ATTACCO 1/2"
TORQUE WRENCH 1/2"

	Nm	L			
1700.110	20 - 110	370	1100	**1**	8011578948887
1700.210	42 - 210	450	1700	**1**	8011578948900
1700.350	70 - 350	630	2800	**1**	8011578948924

1702 CHIAVE DINAMOMETRICA REVERSIBILE SGANCIO RAPIDO LETTURA A FINESTRA - PROFESSIONALE
TORQUE WRENCH REVERSIBLE - QUICK RELEASE SCALE READING WINDOW - PROFESSIONAL

tolleranza / tollerance ± 3%

	Nm		L			
1702.025	5-25	1/4"	285	394	**1**	8011578965648
1702.050	10-50	3/8"	370	948	**1**	8011578965662
1702.100	10-100	1/2"	405	1020	**1**	8011578960247
1702.200	20-200	1/2"	500	1200	**1**	8011578960261
1702.300	60-300	1/2"	595	1330	**1**	8011578960308

Zorro Tecnologie SA

1708 GONIOMETRO PER SERRAGGIO ANGOLARE 1/2" - 1/2"
GONIOMETER ANGULAR TORQUE 1/2" - 1/2"

	L				
1708.010	1/2 - 1/2	152	1	8011578971489	new

1709 GONIOMETRO PER SERRAGGIO ANGOLARE 1/2" - 1/2" CON CALAMITA
GONIOMETER ANGULAR TORQUE WITH MAGNETIC 1/2" - 1/2"

	L				
1709.010	1/2 - 1/2	246	1	8011578971502	new

1720 ESTRATTORE 2 GRIFFE SCORREVOLI AUTOBLOCCANTI
PULLER 2 ARMS

	A x L				
1720.000	80x70	384	1	8011578974183	new
1720.001	90x100	770	1	8011578974206	new
1720.002	120x100	834	1	8011578974220	new
1720.003	170x150	2220	1	8011578974244	new
1720.004	220x150	2438	1	8011578974268	new

1720... PAIO GRIFFE RICAMBIO SCORREVOLI AUTOBLOCCANTI
PAIR OF PULLER ARMS

	per - for				
1720.100	1720.000	333	1	8011578 974282	new
1720.102	1720.001 - 1720.002	360	1	8011578974305	new
1720.104	1720.003 - 1720.004	400	1	8011578974329	new

1720... VITI RICAMBIO
SCREW

	per - for				
1720.300	1720.000		1	8011578974343	new
1720.302	1720.001 - 1720.002		1	8011578974367	new
1720.304	1720.003 - 1720.004		1	8011578974381	new

Zorzo Tecnologie Srl

1723 ESTRATTORE 2 GRIFFE SCORREVOLI CON BULLONI
PULLER 2 ARMS WITH BOLTS

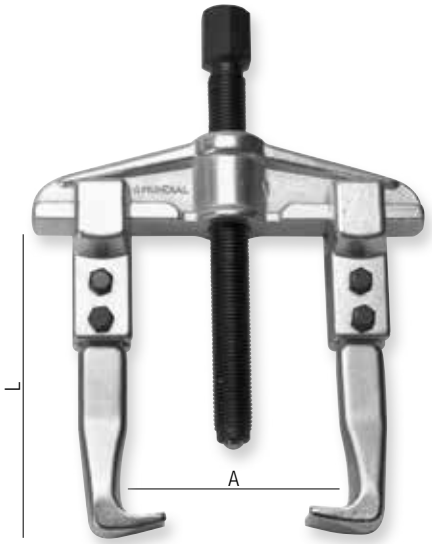

	A x L				
1723.001	90x100	990	**1**	8011578971069	new
1723.002	130x100	1150	**1**	8011578971083	new
1723.003	160x150	2660	**1**	8011578971106	new
1723.004	200x150	3100	**1**	8011578971120	new

1723... PAIO GRIFFE RICAMBIO CON BULLONI
PAIR OF PULLER ARMS WITH BOLTS

	L	per - for				
1723.101	100	1723.001-1723.002	500	**1**	8011578971526	new
1723.103	150	1723.003-1723.004	1200	**1**	8011578971540	new

1723... PAIO GRIFFE LUNGHE RICAMBIO CON BULLONI
PAIR OF LONG PULLER ARMS WITH BOLTS

	L	per - for				
1723.201	200	1723.001-1723.002	1800	**1**	8011578971564	new
1723.203	300	1723.003-1723.004	4200	**1**	8011578971588	new

1723... PAIO GRIFFE RICAMBIO CON BULLONI
PAIR OF PULLER ARMS WITH BOLTS

	L	E x C				
1723.251	100	3,6 x 14	400	**1**	8011578974749	new
1723.253	152	5 x 17	1100	**1**	8011578974909	new

Porro Tecnologie Srl

1725 ESTRATTORE AUTOSERRANTE 3/2 GRIFFE PER ESTERNI
PULLER PILOT 3/2 EXTERNAL

	A x L				
1725.010	23/130 x 140	1654	1	8011578974404	new

1726 ESTRATTORE AUTOSERRANTE 3/2 GRIFFE PER INTERNI
PULLER PILOT 3/2 INTERNAL

	A x L				
1726.010	70/130 x 140	1361	1	8011578974428	new

1730 ESTRATTORE REVERSIBILE 2 GRIFFE
REVERSIBLE 2 JAWS PULLER

EX 1340

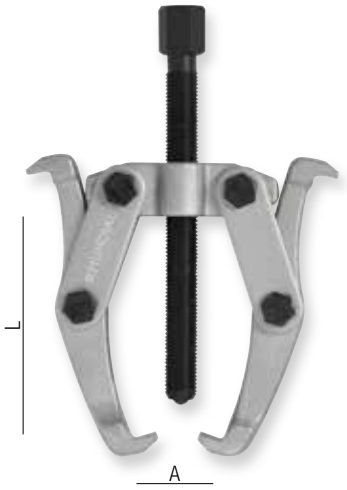

	A x L				
1730.001	90 x 115	1000	1	8011578974442	new
1730.002	140 x 160	2100	1	8011578974466	new

Zorro Tecnologie Srl

1731 ESTRATTORE REVERSIBILE 3 GRIFFE
REVERSIBLE 3 JAWS PULLER

EX 1341

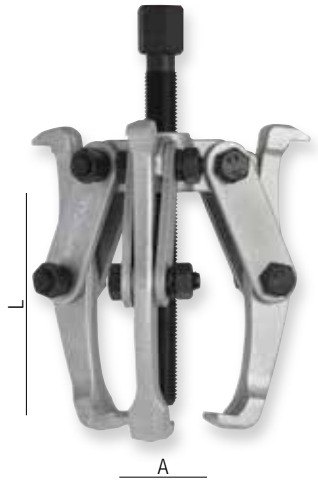

	A x L				
1731.001	90 x 110	1000	**1**	8011578974480	new
1731.002	140 x 160	2900	**1**	8011578974503	new

1738 ESTRATTORE PER SNODI SFERICI
PULLER BALL JOIN

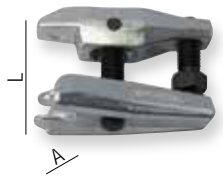

	A x L				
1738.010	18/22 x 50	750	**1**	8011578974527	new

1739 ESTRATTORE PER SNODI SFERICI
PULLER BALL JOIN

	A x L				
1739.010	20/12 x 50	1190	**1**	8011578974541	new

1739 ESTRATTORE PER SNODI SFERICI
PULLER BALL JOIN

	A x L				
1739.020	20/60 x 80	1440	**1**	8011578974565	new

Zorzo Tecnologie Srl

1750 BUSTA AVVOLGIBILE 12 UTENSILI
ROLLER BAG WITH 12 TOOLS

Contenuto-content:
0115.307 3 x 75
0115.612 6 x 125
0116.006 PH 0 x 60
0116.210 PH 2 x 100
0377.020 gr. 200
0495.024 240
1020.067 6 x 7
1020.089 8 x 9
1020.101 10 x 11
1020.123 12 x 13
1020.145 14 x 15
1020.167 16 x 17

	Pz.		
1750.010	12	1280	8011578750008

1754 BUSTA AVVOLGIBILE 12 UTENSILI
ROLLER BAG WITH 12 TOOLS

Contenuto-content:
0115.612 6 x 125
0116.210 PH 2 x 100
0380.020 gr. 200
0425.018 180
0456.016 160
0495.024 240
1020.067 6 x 7
1020.089 8 x 9
1020.101 10 x 11
1020.123 12 x 13
1020.145 14 x 15
1020.167 16 x 17

	Pz.		
1754.010	12	1800	8011578754013

1756 TASCA 4 UTENSILI
ENVELOPE 4 TOOLS

Contenuto-content:
0132.415
0135.108
0689.010
0440.918

	Pz.		
1756.010	4	423	8011578969608

1756 TASCA 4 UTENSILI
ENVELOPE 4 TOOLS

Contenuto-content:
0090.410
0092.110
0683.010
0710.018

	Pz.		
1756.020	4	499	8011578969622

1756 TASCA UTENSILI
ENVELOPE TOOLS

1756.110	vuota - empty	46	8011578969646

Zorzo Tecnologie Srl

1762 CASSETTA PORTAUTENSILI 39 UTENSILI - plastica
TOOL BOX 39 TOOLS - plastic

con interno asportabile e portaminuterie
with removable interior and tray for small parts

Contenuto - content:

0050.307	1030.080
0050.410	1030.090
0050.612	1030.100
0052.108	1030.110
0052.210	1030.130
0236.010	1030.140
0440.918	1030.170
0412.916	1030.190
0490.024	1844.010
0347.090	1820.030
0377.030	
0689.010	

1762.010	470 x 260 x 220	3900	8011578931766

1764 CASSETTA METALLO 33 UTENSILI 5 SCOMPARTI
METAL TOOL BOX WITH 33 TOOLS 5 TRAY

Contenuto - content:

0050.307	1020.067
0050.410	1020.089
0050.612	1020.101
0052.108	1020.123
0052.210	1020.145
0347.090	1020.167
0412.916	1020.189
0440.918	1020.202
0490.024	
0377.030	
0620.010	
0683.010	

1764.010	545 x 215 x 225	8750	8011578764005

1762 CASSETTA PORTAUTENSILI - plastica
TOOL BOX - plastic

con interno asportabile e portaminuterie
with removable interior and tray for small parts

470 x 260 x 220

1762.210	vuota - empty	2100	8011578931773

1764 CASSETTA MET. 5 SCOMPARTI - LUNGA vuota
METAL TOOL BOX WITH 5 TRAY - LONG empty

545 x 215 x 225

1764.015	vuota - empty	5700	8011578934361

Zorzo Technologie Srl

1765 BORSA 28 UTENSILI PER INSTALLATORE
BAG WITH 28 TOOLS FOR INSTALLER

Contenuto - content:
1844.010
0232.306
0050.307
0050.410
0050.612
0052.108
0052.210
0347.090
0683.010
1820.030
1020.067
1020.089
1020.101
1020.123
1020.167
0463.916
0440.918
0412.916
0495.024
0377.020
1765.110

1765.010	430 x 290 x 190	6070	8011578931780

1766 VALIGIA 41 UTENSILI PER ASSISTENZA - 2 pann.
SUITCASE WITH 41 TOOLS - 2 panels

Contenuto - content:

0050.307	0528.010
0050.410	0525.010
0050.612	0527.010
0052.108	0524.010
0052.112	0526.010
0052.210	0232.306
1070.015	0162.105
1844.010	0162.207
0683.010	0162.310
0347.090	0163.005
0412.916	0163.006
0463.916	1766.110
0440.918	
0377.020	
0558.010	
0532.110	
0532.210	
0540.110	
0540.210	
0541.210	
0520.010	
0522.010	

1766.010	490 x 370 x 190	8000	8011578931872

1765 BORSA PER INSTALLATORE
BAG FOR INSTALLER

430 x 290 x 190

1765.110	vuota - empty	3400	8011578949822

1766 VALIGIA ABS ANTIURTO - 2 pann.
ABS SUITCASE - 2 panels

490 x 370 x 190

1766.110	vuota - empty	5500	8011578931841

Zorzo Tecnologie Srl

1766 VALIGIA TROLLEY 41 UTENSILI PER ASS. - 2 pann.
ABS TROLLEY SUITCASE WITH 41 TOOLS - 2 pan.

Contenuto - content:

0050.307	0440.918	0527.010
0050.410	0377.020	0524.010
0050.612	0558.010	0526.010
0052.108	0532.110	0232.306
0052.112	0532.210	0162.105
0052.210	0540.110	0162.207
1070.015	0540.210	0162.310
1844.010	0541.210	0163.005
0683.010	0520.010	0163.006
0347.090	0522.010	1766.110
0412.916	0528.010	
0463.916	0525.010	

1766.210	490 x 370 x 190	8000	8011578975142

1766 VALIGIA TROLLEY CON RUOTE ABS - 2 pann.
ABS TROLLEY SUITCASE WITH WHEELS - 2 panels

1766.310	vuota - empty	5500	8011578970529

1767 VALIGIA 38 UTENSILI PER ASSISTENZA - 2 pann.
SUITCASE WITH 38 TOOLS - 2 panels

Contenuto - content:

0050.307	1030.130
0050.410	1030.150
0050.512	1030.170
0050.612	1030.190
0052.006	1030.220
0052.108	1820.030
0052.210	1844.010
0232.306	1767.110
0347.090	
0377.030	
0412.916	
0417.022	
0440.918	
0463.916	
0490.024	
0689.010	
1030.060	
1030.070	
1030.080	
1030.090	
1030.100	
1030.110	
1030.120	

1767.010	490 x 390 x 190	12100	8011578969189

1767 VALIGIA ALLUMINIO ANTIURTO - 2 pann.
ALUMINIUM SUITCASE - 2 panels

490 x 390 x 190

1767.110	vuota - empty	5600	8011578965846

Zorzo Tecnologie Srl

1770 BORSA 14 UTENSILI ISOLATI 1000 volt VDE
BAG 14 INSULATED TOOLS 1000 volt VDE

Contenuto-content:

0090.310	0090.615	0232.306	0710.018	0716.016
0090.410	0092.007	0377.020	0092.110	0722.010
0090.512	0092.210	0683.010	0712.020	1765.110

1770.010	430 x 290 x 190	5080	8011578770006

1774 VALIGIA 14 UTENSILI ISOLATI 1000 volt VDE
SUITCASE 14 INSULATED TOOLS 1000 volt VDE

Contenuto-content:

0090.310	0092.110	0710.018
0090.410	0092.210	0712.020
0090.512	0232.306	0716.016
0090.615	0377.020	0722.010
0092.007	0683.010	1766.110

1774.010	490 x 370 x 190	7200	8011578774004

1778 BORSA 28 UTENSILI PER IDRAULICI
BAG 28 TOOLS FOR HYDRAULIC

Contenuto - content:
0050.307
0050.410
0050.612
0052.108
0052.210
0347.090
0412.916
0440.918
0490.024
0502.032
0792.042
0774.032
1020.067
1020.089
1020.101
1020.123
1020.145
1020.167
1020.189
1020.202

1778.010	460 x 180 x 180	5650	8011578778002

1778 BORSA PER IDRAULICI
BAG FOR HYDRAULIC

460 x 180 x 180

1778.110	vuota - empty	1800	8011578778026

Zorzo Tecnologie srl